MANITOU

HANDLING YOUR WORLD

647772 EN (16/09/2020)

260 TJ-XP ST3A S1
280 TJ-X ST3A S1

AUSTRALIA

OPERATOR'S MANUAL

(ORIGINAL INSTRUCTIONS)

IMPORTANT

Carefully read and understand this instruction manual before using the lifting platform.

It contains all information relating to operation, handling and lifting platform equipment, as well as important recommendations to be followed.

This document also contains precautions for use, as well as information on the servicing and routine maintenance required to ensure the lifting platform's continued safety of use and reliability.

WHENEVER YOU SEE THIS SYMBOL IT MEANS:

⚠ IMPORTANT ⚠

WARNING ! BE CAREFUL ! YOUR SAFETY OR THE SAFETY OF THE LIFTING PLATFORM IS AT RISK.

- This manual has been produced on the basis of the equipment list and the technical characteristics given at the time of its design.
- The level of equipment of the lifting platform depends on the options chosen and the country of sale.
- According to the lifting platform options and the date of sale, certain items of equipment/functions described herein may not be available.
- Descriptions and figures are non binding.
- MANITOU reserves the right to change its models and their equipment without being required to update this manual.
- The MANITOU network, consisting exclusively of qualified professionals, is at your disposal to answer all your questions.
- This manual is an integral part of the lifting platform.
- It is to be kept in its storage space at all times for ease of reference.
- Hand this manual to the new owner if the lifting platform is resold.

647772 (16/09/2020)
260 TJ-XP ST3A S1 / 280 TJ-X ST3A S1

1st ISSUE	**01/12/2018**	
UPDATED	**16/09/2020**	**2-1 <-> 2-76** **3-1 <-> 3-72** **4-6 <-> 4-16**

Manitou BF S.A Limited liability company with a Board of Directors.
Head office: 430, Rue de l'Aubinière - 44150 Ancenis - FRANCE
Share capital: 39,548,949 euros
857 802 508 RCS Nantes.
Tel: +33 (0)2 40 09 10 11
www.manitou.com

This manual is for information purposes only. Any reproduction, copy, representation, recording, transfer, distribution, or other, in part or in whole, in any format is prohibited. The plans, designs, views, commentaries and instructions, even the document organization that are found in this document, are the intellectual property of MANITOU BF. Any violation of the aforementioned may lead to civil and criminal prosecution. The logos as well as the visual identity of the company are the property of MANITOU BF and may not be used without express and formal authorization. All rights are reserved.

647772 (16/09/2020)
260 TJ-XP ST3A S1 / 280 TJ-X ST3A S1

1 - OPERATING AND SAFETY INSTRUCTIONS

2 - DESCRIPTION

3 - MAINTENANCE

4 - ACCESSORIES

260 TJ-XP ST3A S1



280 TJ-X ST3A S1



1 - OPERATING AND SAFETY INSTRUCTIONS

1 - OPERATING AND SAFETY INSTRUCTIONS

INSTRUCTIONS TO THE COMPANY MANAGER 1-4

THE SITE 1-4

THE OPERATOR 1-4

PLATFORM 1-4

A – SUITABILITY OF THE PLATFORM FOR THE TASK . . . 1-4
B - ADAPTING THE PLATFORM TO USUAL ENVIRONMENTAL CONDITIONS . . . 1-4
C - MODIFYING THE PLATFORM . . . 1-5

INSTRUCTIONS 1-5

MAINTENANCE 1-5

INSTRUCTIONS FOR THE OPERATOR 1-6

INTRODUCTION 1-6

GENERAL INSTRUCTIONS 1-6

A - INSTRUCTION MANUAL . . . 1-6
B - AUTHORISATION FOR USE IN FRANCE . . . 1-6
C - MAINTENANCE . . . 1-6
D - MODIFYING THE PLATFORM . . . 1-7
E - DIESEL PLATFORM AXLES . . . 1-7
F - SAFETY DEVICES. . . . 1-7

OPERATING INSTRUCTIONS 1-7

A - BEFORE STARTING-UP THE PLATFORM. . . . 1-7
B - DRIVER'S OPERATING INSTRUCTIONS . . . 1-7
C - ENVIRONMENT . . . 1-8
C1 - OPERATION NEAR AERIAL CONDUCTORS (OVERHEAD POWER LINES) . . . 1-9
D - VISIBILITY . . . 1-16
E - STARTING-UP THE ENGINE-POWERED PLATFORM. . . . 1-16
E - STARTING UP THE ELECTRIC-POWERED PLATFORM. . . . 1-16
F - OPERATING THE PLATFORM . . . 1-17
G - STOPPING THE PLATFORM . . . 1-17

INSTRUCTIONS FOR WELDING AND BLOW TORCH WORK ON AN EXTERNAL STRUCTURE 1-18

A - WITH AN ELECTRICAL WELDING SET . . . 1-18
B - WITH A BLOW TORCH . . . 1-18

PLATFORM MAINTENANCE INSTRUCTIONS 1-20

GENERAL INSTRUCTIONS 1-20

MAINTENANCE 1-20

LUBRICANT AND FUEL LEVELS 1-20

BATTERY ELECTROLYTE LEVEL (ELECTRIC PLATFORM) 1-20

HYDRAULICS 1-20

ELECTRICITY 1-21

TILT SENSOR 1-21

WELDING ON THE ACCESS PLATFORM 1-21

WASHING THE PLATFORM 1-21

647772 (16/09/2020)
260 TJ-XP ST3A S1 / 280 TJ-X ST3A S1

IF THE PLATFORM IS NOT TO BE USED FOR A LONG TIME *1-22*

INTRODUCTION **1-22**

PREPARING THE PLATFORM **1-22**

PROTECTING THE ENGINE (DIESEL PLATFORM) **1-22**

BATTERY CHARGING (ELECTRIC PLATFORM) **1-22**

PROTECTING THE PLATFORM **1-22**

BRINGING THE PLATFORM BACK INTO SERVICE **1-22**

DISPOSING OF THE PLATFORM *1-23*

RECYCLING OF MATERIALS **1-23**

METALS 1-23

PLASTICS 1-23

RUBBER 1-23

GLASS 1-23

ENVIRONMENTAL PROTECTION **1-23**

WORN OR DAMAGED PARTS 1-23

USED OIL 1-23

USED BATTERIES. 1-23

INSTRUCTIONS TO THE COMPANY MANAGER

THE SITE

Proper management of the personnel lifting platform's area of travel will reduce the risk of accidents:

- Ground not unnecessarily uneven or obstructed.
- No excessive slopes.
- Pedestrian traffic controlled, etc.

THE OPERATOR

- Only qualified, authorised personnel can use the platform. This authorisation is given in writing by the appropriate person in the establishment where the platform is to be used and must be carried permanently by the operator.

⚠ IMPORTANT ⚠

On the basis of experience, there are a number of possible situations in which operating the platform is contra-indicated.
Such foreseeable abnormal uses, the main ones being listed below, are strictly forbidden:
- The foreseeable abnormal behaviour resulting from ordinary negligence, but which does not result from any wish to put the machinery to any improper use.
- The reflex reactions of a person in the event of a malfunction, incident, fault, etc. during operation of the platform.
- Behaviour resulting from application of the "principle of least effort" when performing a task.
- For certain machines, the foreseeable behaviour of such persons as: apprentices, teenagers, handicapped persons, trainees tempted to drive a platform, operators tempted to operate a truck to win a bet, in competition or for their own personal experience.
The person in charge of the equipment must take these criteria into account when assessing the suitability of a person to drive.

⚠ IMPORTANT ⚠

OBTAIN INFORMATION ON:
- How to behave when there is a fire.
- The location of the nearest first aid kit and fire extinguisher.
- The emergency telephone numbers for calling (the doctors, ambulance, hospital and fire brigade).

PLATFORM

A – SUITABILITY OF THE PLATFORM FOR THE TASK

- MANITOU has ensured that this platform is suitable for use under the standard operating conditions defined in this operator's manual, with an **OVERLOAD test coefficient of 1.25** and an **OPERATIONAL test coefficient of 1.1**, as stipulated in harmonised standard **EN 280** for **MPLP** (Mobile Personnel Lifting Platforms). Before putting the platform into operation, the company manager must check that the platform is suitable for the work to be carried out and conduct certain tests (in accordance with current legislation).

B - ADAPTING THE PLATFORM TO USUAL ENVIRONMENTAL CONDITIONS

- In addition to standard equipment mounted on your platform, many options are available, such as: rotating beacon light, working light, etc. Contact your dealer.
- Take into account climatic and atmospheric conditions of the site of utilisation.
  - Protection against frost (◅ 3 - MAINTENANCE: LUBRICANTS AND FUEL).
  - Adaptation of lubricants (ask your dealer for information).
  - Engine filtration (◅ 3 - MAINTENANCE: FILTER CARTRIDGES AND BELTS).

⚠ IMPORTANT ⚠

For operation under average climatic conditions, i.e.: between -15°C and +35°C, lubricants are topped up in the factory.
For operation under more severe climatic conditions, before starting up, it is necessary to drain all the circuits, then ensure correct levels of lubricants using lubricants properly suited to the relevant ambient temperatures. The same applies to coolant.

- Preventing fire risks associated with use in dusty and flammable conditions.
- A platform operating in an area without fire extinguishing equipment must be equipped with an individual extinguisher. Solutions are available, consult your dealer.

⚠ IMPORTANT ⚠

Diesel platforms are designed for outdoor use under normal atmospheric conditions and indoor use in suitably aerated and ventilated premises.
Electric platforms are designed for outdoor use under normal atmospheric conditions and for indoor use.
It is prohibited to use the platform in areas where there is a risk of fire or which are potentially explosive (e.g. refineries, fuel or gas depots, stores of inflammable products, etc.).
For use in these areas, specific equipment is available (ask your dealer for information).

647772 (16/09/2020)
260 TJ-XP ST3A S1 / 280 TJ-X ST3A S1

C - MODIFYING THE PLATFORM

⚠ IMPORTANT ⚠

It is strictly prohibited to replace platform components with components not approved by Manitou (batteries, wheels, basket, etc.).

⚠ IMPORTANT ⚠

It is strictly forbidden to change the structure and settings of the various components of your platform (hydraulic pressure, calibrating limiters, engine speed, sensors, addition of extra equipment, addition of counterweight, unapproved attachments, alarm systems, etc.) yourself.
In this event, the manufacturer cannot be held responsible.

⚠ IMPORTANT ⚠

Risk of the access platform becoming unstable:
- Depending on the model, your platform may be supplied with standard wheels or all-terrain wheels. It is PROHIBITED to change from one type of wheel to the other.
- ELECTRIC PLATFORM: it is PROHIBITED to replace the batteries with lighter batteries.

INSTRUCTIONS

- The operator's manual must always be in good condition and kept in the place provided on the platform and in the language used by the operator.
- You must replace the instructions manual, as well as any plates or stickers, if they are no longer legible or are missing or damaged.

MAINTENANCE

⚠ IMPORTANT ⚠

Refer to chapter: PLATFORM MAINTENANCE INSTRUCTIONS.

- Maintenance or repairs other than those detailed in chapter 3 - MAINTENANCE must be carried out by qualified personnel (consult your dealer) and under the necessary safety conditions to maintain the health of the operator and any third party.

⚠ IMPORTANT ⚠

Your platform must be periodically inspected to ensure its continued compliance.
The inspection frequency is defined by the legislation applying in the country in which the platform is used.

- Example for France: The manager in charge of the establishment using an access platform must open and maintain a maintenance log for each machine (order of 2 March 2004).

INSTRUCTIONS FOR THE OPERATOR

INTRODUCTION

⚠ IMPORTANT ⚠

The risk of accident while using, servicing or repairing your platform can be reduced if you follow the safety instructions and preventive measures detailed in these instructions.
Failure to respect the safety and operating instructions, or the instructions for repairing or servicing your platform may lead to serious, even fatal accidents.

- Only the operations and manoeuvres described in this operator's manual must be performed. The manufacturer cannot predict all possible risky situations. Consequently, the safety instructions given in the operator's manual and on the platform itself are not exhaustive.
- As an operator, you must at all times give reasonable consideration to the possible risks to yourself, to others or to the platform itself when you use it.

GENERAL INSTRUCTIONS

A - INSTRUCTION MANUAL

- Carefully read and understand the operator's manual.
- The operator's manual must always be in good condition and kept in the place provided on the platform and in the language used by the operator.
- You must replace the instructions manual, as well as any plates or stickers, if they are no longer legible or are missing or damaged.
- Any operations or manoeuvres not described in the operator's manual are categorically forbidden.
- Follow the safety advice and the instructions on the platform.
- A second operator must be present on the ground as a safety measure when using the platform.
- Familiarise yourself with the platform on the terrain where it will be used.
- The machine must also be used in accordance with good engineering practice.
- Do not use the platform if there is a wind speed of over 45 km/h. The platform's arms must not be subjected to a side force of more than 400 N (40 kg).
- Platforms intended exclusively for indoor use must not be used outside the buildings.

B - AUTHORISATION FOR USE IN FRANCE

(or see current legislation in other countries).

- Only qualified, authorised personnel can use the platform. This authorisation is given in writing by the appropriate person in the establishment where the platform is to be used and must be carried permanently by the operator.
- The operator is not empowered to authorise the driving of the platform by another person.

C - MAINTENANCE

- The operator must carry out the daily maintenance (◁ 3 - MAINTENANCE) before using the platform in his place of work.
- The operator must immediately advise his superior if his platform is not in good working order or does not comply with the safety notice.
- The operator is prohibited from carrying out any repairs or adjustments himself, unless he has been trained for this purpose. He must keep the platform properly cleaned if this is among his responsibilities.
- The operator is responsible for deciding and adjusting the frequency of cleaning needed to prevent the risk of fire ensuing from the build-up of flammable material. The operator should pay special attention to all the areas of the platform where these risk materials are likely to accumulate.
- The operator must ensure that the wheels are appropriate for the type of ground (see the ground contact area of the wheels (◁ 2 - DESCRIPTION: SPECIFICATIONS). Optional solutions are available, consult your dealer.

⚠ IMPORTANT ⚠

Do not use the platform if the wheels are damaged or excessively worn, because this could put your own safety or that of others at risk, or cause damage to the platform itself.

⚠ IMPORTANT ⚠

In the case of electric platforms, the operator must ensure that:
- Safety goggles are always worn when charging the batteries.
- The batteries are not charged in an explosive environment.
- There is no smoking and no naked flame directed towards the batteries when they are being handled (removal/installation) and when monitoring filling levels.
Do not leave the battery charger connected during a lightning storm.

D - MODIFYING THE PLATFORM

◅ INSTRUCTIONS TO SITE MANAGER: C - MODIFYING THE PLATFORM.

E - DIESEL PLATFORM AXLES

NON-OSCILLATING AXLE (ACCORDING TO MODEL)

⚠ IMPORTANT ⚠

The chassis is rigid, so the platform can be load bearing on only three wheels.

OSCILLATING AXLE (ACCORDING TO MODEL)

⚠ IMPORTANT ⚠

An oscillating axle enables the platform to have a ground reach on four wheels when in transport position.

When moving in the working position over uneven terrain, the oscillating axle is locked (the frame is stiff) so the platform may be bearing on only three wheels.

F - SAFETY DEVICES

- This machine is fitted with special safety devices that are able to limit its operation as circumstances require (◅ 2 - DESCRIPTION):
  - Overload in the basket.
  - Tilting of the platform beyond the authorised limits.
  - Blocking of the oscillating axle (according to model).
  - Slack or broken telescope cable (according to model).

OPERATING INSTRUCTIONS

A - BEFORE STARTING-UP THE PLATFORM

- Perform the daily maintenance operations (◅ 3 - MAINTENANCE).

B - DRIVER'S OPERATING INSTRUCTIONS

- Whatever their experience, operators are advised to familiarise themselves with the position and operation of the control panels before putting the platform into operation.
- The platform's arms must be fully lowered (down position for scissor platforms) before getting into or out of the basket; always get in and out facing the inside of the basket.
- If the platform is equipped with steps, the basket must be positioned vertically with these before getting in or out.
- Always use both hands and one foot or both feet and one hand to get in and out.
- Ensure that the guard rail and/or the access gate (according to model) is fully in the locked position before operating the platform from the basket.
- MANITOU recommends a safety harness in the operator's size be provided when the platform is in use (for the harness attachment in the basket, ◅ 2 - DESCRIPTION).
- Safety helmets must be worn.
- Wear suitable clothing for driving the platform; do not wear baggy clothes.
- Never operate the platform when hands or feet are wet or soiled with greasy substances.
- Make sure you have the appropriate protective equipment for the job to be done.
- Prolonged exposure to high noise levels may cause hearing problems. It is recommended to wear ear muffs to protect against excessive noise.
- Remain alert at all times when using the platform. Do not listen to the radio or music using headphones or earphones.
- The operator must always be in the normal operator's position. It is prohibited to have arms or legs, or generally any part of the body, protruding from the basket.
- The control units must never in any event be used for any other than their intended purposes (e.g. getting in or out of the basket, portmanteau, etc.).
- The platform must not be fitted with unauthorised attachments that increase the unit's wind load.
- Do not use a ladder or any improvised constructions in the basket to reach greater heights.
- Do not climb on the basket frame to reach greater heights.

647772 (16/09/2020)
260 TJ-XP ST3A S1 / 280 TJ-X ST3A S1

C - ENVIRONMENT

- Comply with site safety regulations.
- The platform can be operated from the ground: ensure that you forbid access.
- If you have to use the platform in a dark area or at night, make sure it is equipped with working lights.
- The platforms may not be used as cranes or elevators for the permanent transport of people or materials, nor as jacks or supports.
- Suspending a load under the basket or on any part of the lifting apparatus is strictly forbidden.
- When operating, ensure that there is no one or anything impeding the platform's progress and operation.
- When raising the platform, ensure that no one or anything impedes the platform's operation and do not perform any inappropriate manoeuvres.
- Do not allow anybody to come near the working area of the platform or pass beneath an elevated load. To ensure this, mark out your working area.
- Driving on a longitudinal slope:
  - Adjust the platform speed with the proportional control handle.
- Take into account the platform's dimensions and its load before trying to negotiate a narrow or low passageway.
- Never move onto a loading bridge without having first checked:
  - That it is suitably positioned and made fast.
  - That the unit to which it is connected (wagon, lorry, etc.) will not shift.
  - That this bridge is prescribed for the size and mass of the platform (◁ 2 - DESCRIPTION).
  - That the slope of the bridge is not greater than the platform's maximum authorised slope (◁ 2 - DESCRIPTION).
- Never move onto a foot bridge, floor or freight lift, without being certain that they are prescribed for the mass and size of the platform to be loaded and without having checked that they are in sound working order.
- Be careful in the area of loading bays, trenches, scaffolding, soft ground, manholes, etc.
- Make sure the ground is stable and firm under the wheels and/or stabilisers before lifting the basket. If necessary, add sufficient wedging under the stabilisers. Do not attempt to carry out operations that exceed the platform's capabilities.
- Ensure that any materials loaded onto the platform (pipes, cables, containers, etc.) cannot fall out. Do not pile these materials to the point where it is necessary to step over them.

⚠ IMPORTANT ⚠

If the basket must remain stationary over a structure for a long period, there is a risk that the basket will descend and rest on this structure because of the oil cooling in the cylinders or a minor leak in the cylinder locking system. To eliminate this risk:
- Regularly check the distance between the basket and the structure and re-adjust if necessary.
- If possible use the platform at an oil temperature as close as possible to ambient temperature.

- In the case of work near aerial lines, ensure that the safety distance is sufficient between the working area of the platform and the aerial line.

⚠ IMPORTANT ⚠

You must consult your local electrical agency.
You could be electrocuted or seriously injured if you operate or park the platform too close to power cables.

⚠ IMPORTANT ⚠

If the platform comes into contact with electric wires, press the Emergency Stop button.
Call for help, warn people on the ground not to touch the basket, and ask them to switch off the power supply to the wires or have it switched off.

⚠ IMPORTANT ⚠

It is forbidden to use the platform close to electricity cables. Maintain the specified safe distances.

RATED VOLTAGE (VOLTS)	SAFETY DISTANCE (METRES)
50 < U < 1000	2.30 M
1000 < U < 30000	2.50 M
30,000 < U < 45,000	2.60 M
45,000 < U < 63,000	2.80 M
63,000 < U < 90,000	3.00 M
90,000 < U < 150,000	3.40 M
150,000 < U < 225,000	4.00 M
225,000 < U < 400,000	5.30 M
400,000 < U < 750,000	7.90 M

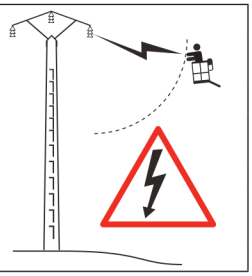

C1 - OPERATION NEAR AERIAL CONDUCTORS (OVERHEAD POWER LINES)

"Reproduced from as2550.1"

C1-1 General

This clause refers to hazards and risks presented by the set-up and operation of the platform in the vicinity of overhead electrical conductors.

NOTES:

1 - Electricity supply bodies in each state may have issued guidelines for the use of platforms and other plant in the vicinity of overhead conductors; for example, the electricity association of new south wales' publication 'interim guide for operating platforms and plant in proximity to overhead power lines'.

2 - A conservative approach has been adopted. Separation distances have not been chosen based purely on electrical voltages of conductors, nor whether the conductor is bare or insulated.

The distances were chosen based on experience and practical considerations, since platforms cannot be operated as accurately as arcing distances can be calculated.

Before operating the platform from the stowed condition, a check for the presence of overhead conductors and power lines shall be undertaken.

Throughout clause a, the following definitions apply:

(a) aerial conductor—an overhead conductor that is either insulated or bare.

(b) Operation—where any platform components are moved or about to be moved from their stowed position.

(c) Overhead power line—aerial conductors and other parts that make up an aerial line for the distribution and transmission of electrical energy.

(d) Electricity distributor—the power supply authority, transmission line operator, generator, traction company or distribution company.

All aerial conductors shall be treated as alive unless the platform operator has received, from the electricity distributor or transmission line operator, documentary evidence that the conductors have been positively de-energized, isolated and earthed.

Where such documentary evidence has been made available, it shall state the date and time frame of isolation and any special conditions and precautions. The platform shall not be operated in contravention of this documentary information.

C1-2 Precautions when operating near live aerial conductors

The platform shall only be operated within close proximity of live aerial conductors, if the separation distances appropriate to the 'NO-GO-ZONE' or 'SPOTTER-REQUIREDZONE', and risk controls given in Clause C1.3, are maintained.

A site-specific risk assessment shall be completed before the commencement of the job by a trained and competent person. This assessment shall be verified immediately before work commences, and its relevance monitored during the job. If initial associated circumstances change, work shall cease until an appropriate risk assessment is undertaken.

Where a spotter is required to inform the operator in the event of the platform approaching the zone boundaries shown, the following applies:

(a) The spotting operation shall be carried out by a competent person.

NOTE: Required competency levels may be defined by the Office of the Chief Electrical Inspector or similar body in the applicable State.

(b) The spotter shall be positioned so as to minimize the risk of exposure to hazards.

(c) The spotter shall be able to clearly observe the separation distances.

(d) The spotter shall not undertake any other work whilst performing spotting duties.

(e) The spotter shall be specifically instructed in the workplace hazards applicable to the site.

(f) The spotter shall be able to communicate with the platform operator at all times during erection, operation and dismantling.

C1-3 Separation distances and risk controls

Where possible, the zone separation distances shall be not less than those shown in Figure C1.3.

NOTE: The separation distances shown in Figure C1.3 include allowance for sag and sway of line(s) due to the effects of wind and temperature.

Where the separation distances cannot be achieved, the electricity distributor shall be notified in writing. The platform shall not be operated within the 'no go zone' until the applicable requirements below are satisfied.

The separation distance between the platform and aerial conductor and risk controls when operating in the vicinity of aerial conductors shall comply with the following:

(a) Overhead power lines (up to and including 133 kV) The following applies:

(i) No go zone The platform shall not be operated in the 'no go zone' as indicated in Figure A.3 for overhead power lines up to and including 133 kV, unless —

(A) written permission from the electricity distributor has been obtained;

(B) all conditions specified by the electricity distributor are complied with;

(C) the electricity distributor is notified before commencing work;

(D) a spotter performs spotting duties; and

(E) a pre-start site/job meeting has been convened and a risk assessment completed.

(ii) Spotter required zone The platform shall not be operated in the 'spotter required zone' as indicated in Figure C1.3 for overhead power lines up to and including 133 kV, unless—

(A) written permission from the electricity distributor has been obtained;

(B) a spotter performs spotting duties; and

(C) a pre-start site/job meeting has been convened and a risk assessment completed.

(b) Overhead power lines (greater than 133 kV) The following applies:

(i) No go zone The platform shall not be operated in the 'no go zone' as indicated in Figure C1.3 for overhead power lines greater than 133 kV, unless —

(A) an easement entry permit has been provided by the electricity distributor;

(B) written permission from the electricity distributor has been obtained;

(C) all conditions specified by the electricity distributor are complied with;

(D) the electricity distributor is notified before commencing work;

(E) a spotter performs spotting duties; and

(F) a pre-start site/job meeting has been convened and a risk assessment completed.

(ii) Spotter required zone The platform shall not be operated in the 'spotter required zone' as indicated in Figure 6.19.3 for overhead power lines greater than 133 kV, unless—

(A) written permission from the electricity distributor has been obtained;

(B) an easement entry permit has been provided by the electricity distributor;

(C) a spotter performs spotting duties; and

(D) a pre-start site/job meeting has been convened and a risk assessment completed.

(c) Public transport authorities Where aerial conductors are dedicated to the use of public transport authorities, e.g., tramways and railways, the separation distance shall be the same as that for aerial conductors up to and including 133 kV (see Item (a)).

647772 (16/09/2020)
260 TJ-XP ST3A S1 / 280 TJ-X ST3A S1

The separation distance between the platform and aerial conductor and risk controls when operating in the vicinity of aerial conductors shall comply with the following:

(a) Overhead power lines (up to and including 133 kV) The following applies:

(i) No go zone The platform shall not be operated in the 'no go zone' as indicated in Figure C1.3 for overhead power lines up to and including 133 kV, unless —

(A) written permission from the electricity distributor has been obtained;

(B) all conditions specified by the electricity distributor are complied with;

(C) the electricity distributor is notified before commencing work;

(D) a spotter performs spotting duties; and

(E) a pre-start site/job meeting has been convened and a risk assessment completed.

(ii) Spotter required zone The platform shall not be operated in the 'spotter required zone' as indicated in Figure C1.3 for overhead power lines up to and including 133 kV, unless—

(A) written permission from the electricity distributor has been obtained;

(B) a spotter performs spotting duties; and

(C) a pre-start site/job meeting has been convened and a risk assessment completed.

(b) Overhead power lines (greater than 133 kV) The following applies:

(i) No go zone The platform shall not be operated in the 'no go zone' as indicated in Figure C1.3 for overhead power lines greater than 133 kV, unless —

(A) an easement entry permit has been provided by the electricity distributor;

(B) written permission from the electricity distributor has been obtained;

(C) all conditions specified by the electricity distributor are complied with;

(D) the electricity distributor is notified before commencing work;

(E) a spotter performs spotting duties; and

(F) a pre-start site/job meeting has been convened and a risk assessment completed.

(ii) Spotter required zone The platform shall not be operated in the 'spotter required zone' as indicated in Figure 6.19.3 for overhead power lines greater than 133 kV, unless—

(A) written permission from the electricity distributor has been obtained;

(B) an easement entry permit has been provided by the electricity distributor;

(C) a spotter performs spotting duties; and

(D) a pre-start site/job meeting has been convened and a risk assessment completed.

(c) Public transport authorities Where aerial conductors are dedicated to the use of public transport authorities, e.g., tramways and railways, the separation distance shall be the same as that for aerial conductors up to and including 133 kV (see Item (a)).

(d) Downshop conductors Before mobile machinery is set up for operation in the vicinity of downshop conductors, the power supply to the conductors shall be isolated prior to operation unless appropriate control measures have been developed and implemented.

NOTES:

1 - Downshop conductors, e.g., collector rails, should be clearly identified.
2 - Clearances from downshop conductors should be in accordance with AS/NZS 3000.

(e) Barriers at ground level Where people not involved in the lifting operation could otherwise come into the area of possible voltage step potential, barriers shall be provided at ground level to prevent this from occurring. Appropriate warning signs shall be displayed on the barriers. Pedestrians should be barricaded from the area of possible voltage step potential (see Figure 6.19.4) in the vicinity of the crane and associated equipment.

647772 (16/09/2020)
260 TJ-XP ST3A S1 / 280 TJ-X ST3A S1

(f) Person to platform contact Only the platform operator shall be in contact with any part of the platform during operation.

(g) Earthing systems An appropriate earthing system shall be fitted to the platform and shall be in use. Operators and those working in proximity to the platform shall be advised of the limits of the effectiveness of the earthing equipment.

NOTE: The purpose of the earthing system is to provide an alternate path to earth to minimize risks to personnel and plant, and it may not be likely to trip circuit breakers that form part of the electricity transmission system.

(h) High visibility bunting Where high visibility bunting is applied to the conductors, it shall not be regarded as insulation.

FIG. C1.3 CLEARANCES FROM LIVE AERIAL CONDUCTORS

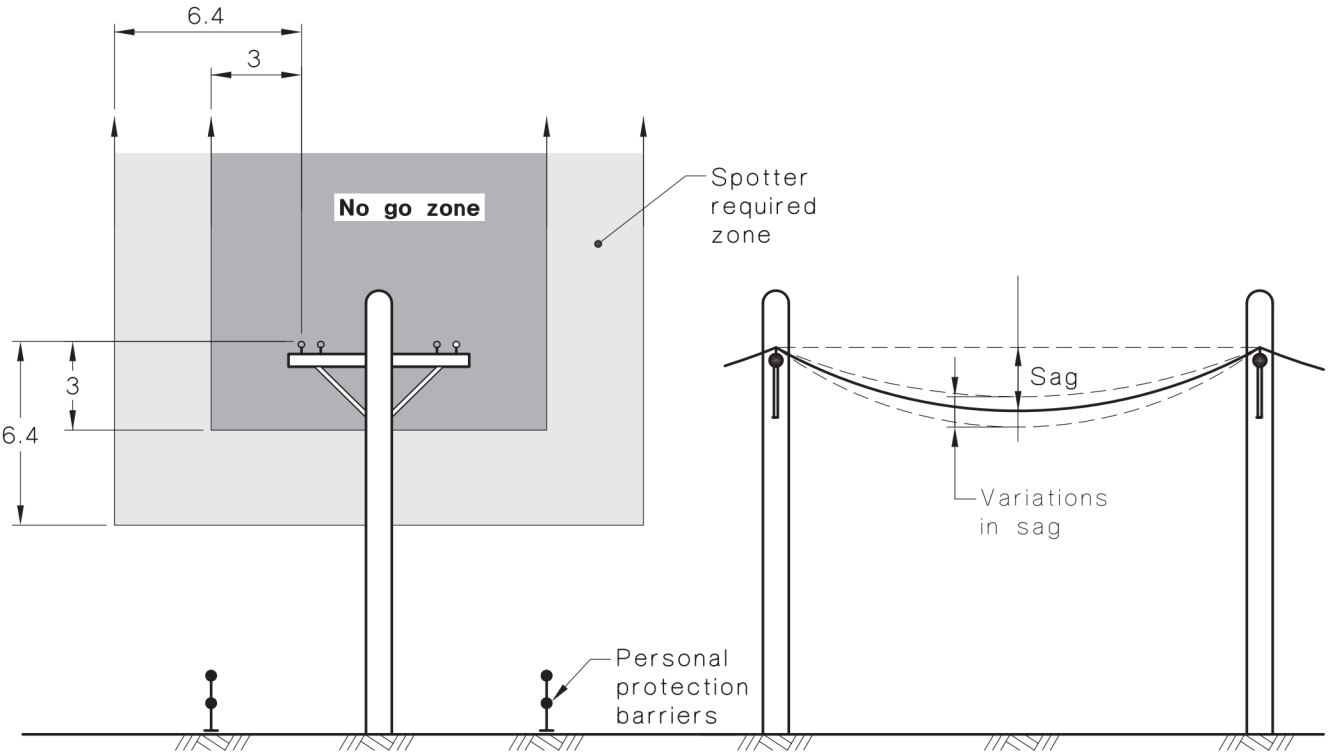

(a) Distribution lines up to and including 133 kV

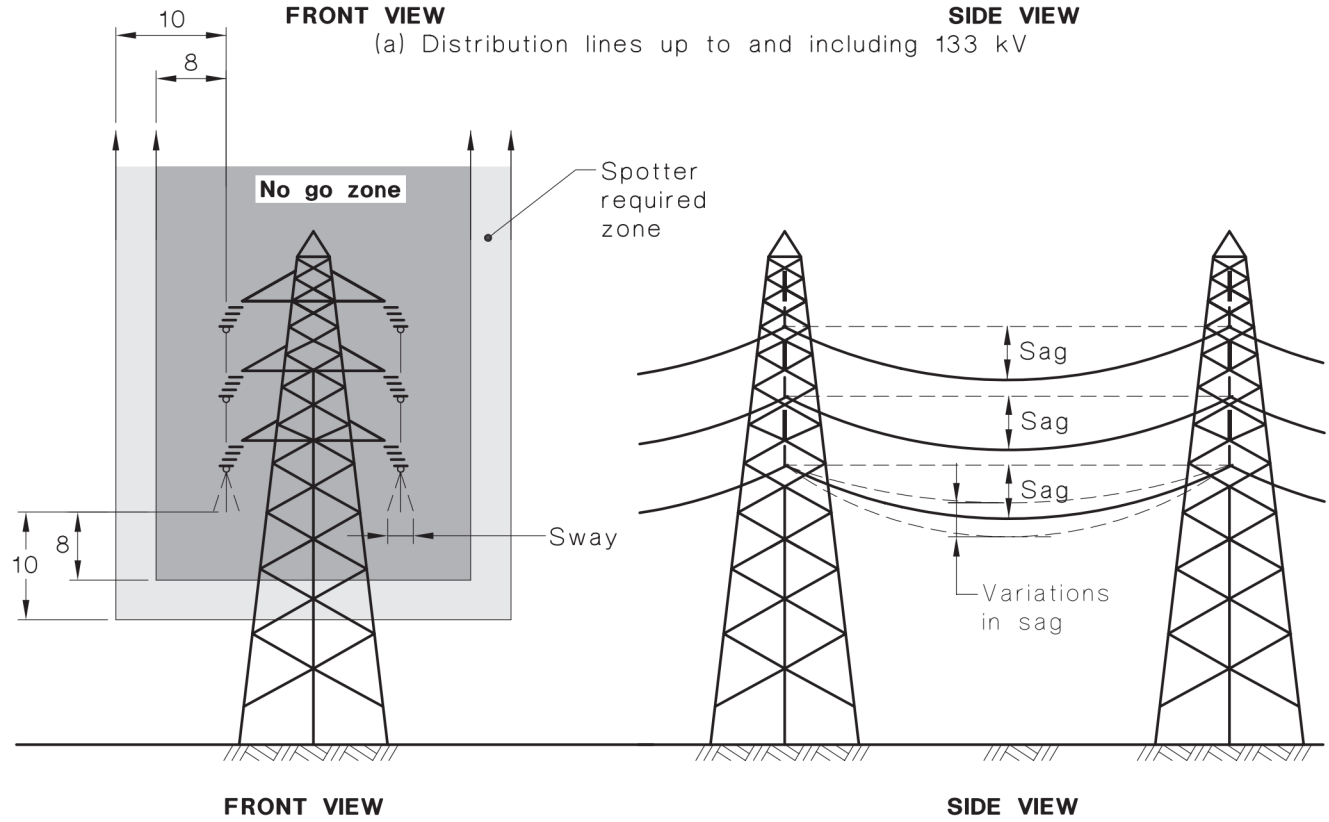

(b) Transmission lines greater than 133 kV

LEGEND:

= No shading, in the front views, indicates no proximity requirements

= Light shading indicated spotter is required

= Heavy shading indicates the NO GO ZONE

647772 (16/09/2020)
260 TJ-XP ST3A S1 / 280 TJ-X ST3A S1

C1-4 Aerial conductor contact

If the platform or load contacts aerial conductors, the relevant electricity distributor shall be immediately notified of the situation and, until assistance is received, a competent person shall remain in a prominent position to warn of the danger of electrocution.

In such an event the platform operator should act as follows:

(a) Remain the platform.

(b) Warn all other personnel to keep away from the platform and not to touch any part of the platform.

(c) Without anyone approaching the platform, operate the platform in such a manner to break contact, where possible.

(d) When unable to move or disentangle the platform from the aerial conductors, remain on the platform and take no further action until it is confirmed that conditions are safe.

Where the platform operator is immobilized, the power shall be isolated before assistance is given.

When a platform has been in contact with a live aerial conductor, it shall be checked by a competent person for any damage. Any actions recommended by the competent person shall be completed before it is returned to service.

FIG. C1.4 TYPICAL AFFECTED AREA SURROUNDING A PLATFORM WHEN IN CONTACT WITH A LIVE AERIAL CONDUCTOR

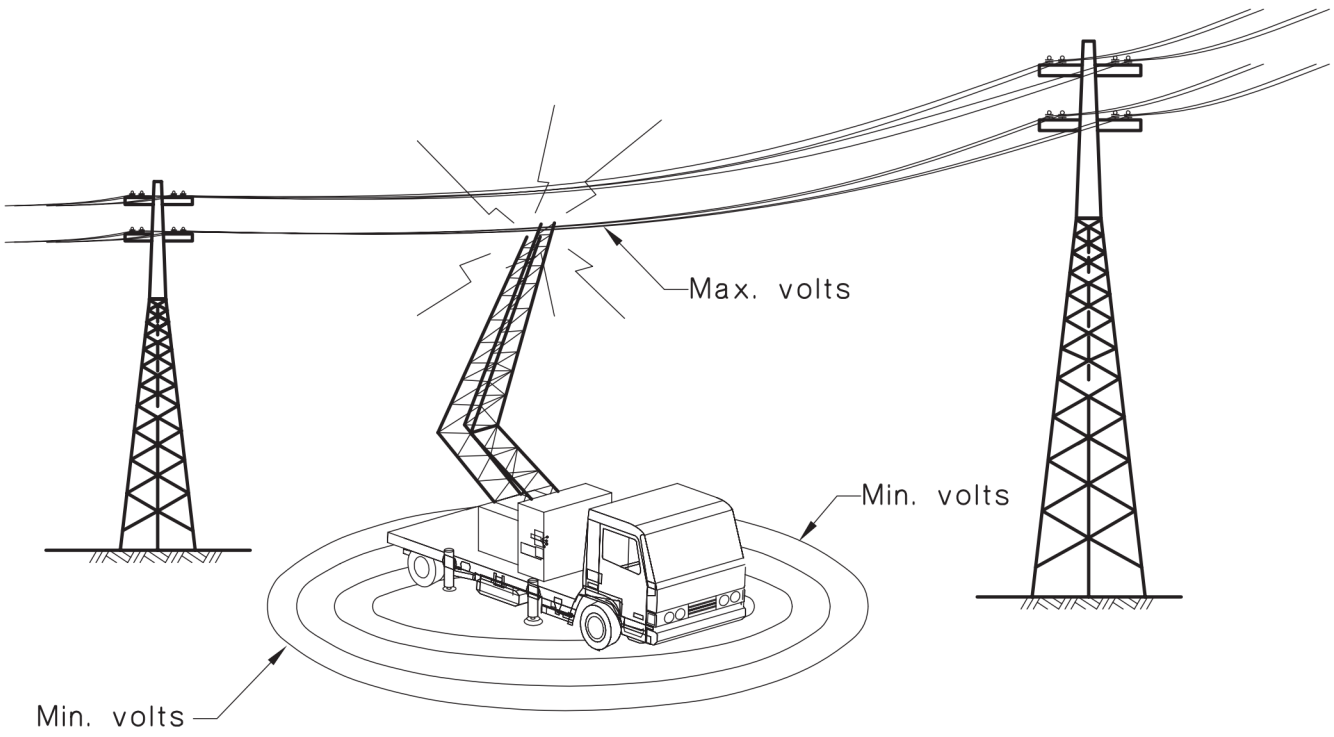

(a) Affected area

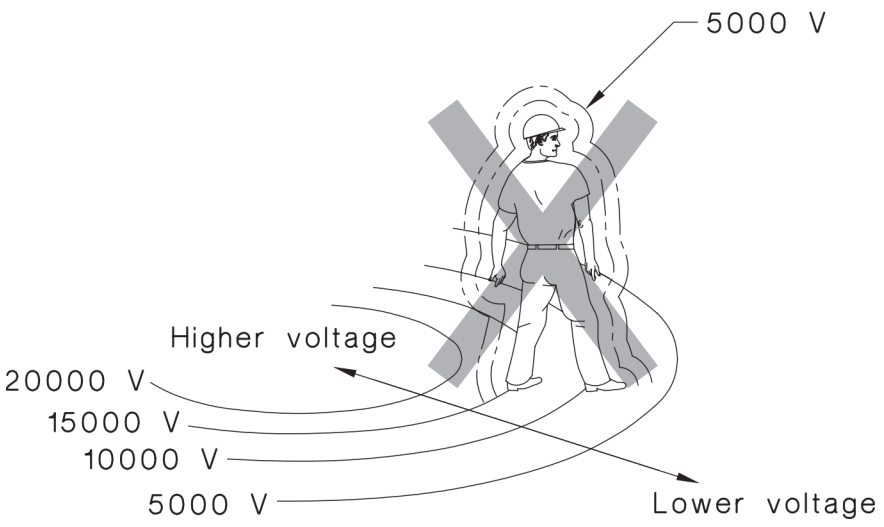

647772 (16/09/2020)
260 TJ-XP ST3A S1 / 280 TJ-X ST3A S1

⚠ IMPORTANT ⚠

Do not use this machine during lightning storms, snow storms, during frosty periods or in hazardous weather conditions. In case of strong wind exceeding 45 km/h, do not make any movement that may endanger the platform's stability.

- To visually recognise this wind speed, refer to the empirical wind evaluation scale below:

BEAUFORT scale (wind speed at a height of 10 m on a flat site)						
Force	**Type of wind**	**Speed (knots)**	**Speed (km/h)**	**Speed (m/s)**	**Effects on Land**	**Sea conditions**
0	Calm	**0 - 1**	**0 - 1**	**<0.3**	Smoke rises vertically.	Sea is like a mirror.
1	Light air	**1 - 3**	**1 - 5**	**0.3 - 1.5**	Smoke indicates direction of wind.	Ripples with appearance of scale, no foam crests.
2	Light breeze	**4 - 6**	**6 - 11**	**1.6 - 3.3**	Wind felt on face, leaves rustle.	Short wavelets, but pronounced.
3	Gentle breeze	**7 - 10**	**12 - 19**	**3.4 - 5.4**	Leaves and small twigs in constant motion.	Very small waves, crests begin to break.
4	Moderate breeze	**11 - 16**	**20 - 28**	**5.5 - 7.9**	Wind raises dust and loose pieces of paper; small branches are moved.	Small waves, becoming longer, numerous whitecaps.
5	Fresh breeze	**17 - 21**	**29 - 38**	**8 - 10.7**	Small tees in leaf begin to sway.	Wavelets form on inland waters; moderate waves, taking longer form.
6	Strong breeze	**22 - 27**	**39 - 49**	**10.8 - 13.8**	Large branches in motion, whistling heard in overhead wires, umbrella use becomes difficult.	Larger waves forming, whitecaps everywhere, some spray.
7	Near gale	**28 - 33**	**50 - 61**	**13.9 - 17.1**	Whole trees in motion, inconvenience felt when walking against the wind.	Sea heaps up; white foam from breaking waves begins to be blown in streaks along the direction of the wind.
8	Gale	**34 - 40**	**62 - 74**	**17.2 - 20.7**	Wind breaks twigs off trees; impedes progress.	Moderately high waves of greater length; edges of crests begin to break into spindrift.
9	Strong gale	**41 - 47**	**75 - 88**	**20.8 - 24.4**	Wind damages roofs (chimneys, slates, etc.).	High waves, crests of waves begin to topple, streaks of foam; reduced visibility.
10	Storm	**48 - 55**	**89 - 102**	**24.5 - 28.4**	Seldom experienced inland; trees uprooted; considerable structural damage occurs.	Very high waves; white streaks of foam; reduced visibility.
11	Violent storm	**56 - 63**	**103 - 117**	**28.5 - 32.6**	Very rare, widespread damage.	Exceptionally high waves able to hide medium sized ships from view, reduced visibility.
12	Hurricane	**64 +**	**118 +**	**32.7 +**	Devastating damage.	Sea completely white; air filled with foam and spray, very reduced visibility.

D - VISIBILITY

- Ensure good visibility on your route at all times. To increase your visibility, you can move forwards with the jib arm slightly raised (beware of the risk of falls in the basket from knocking into a low doorway, overhead electric wires, travelling cranes, highway bridges, rail tracks or any obstacle in the area in front of the platform). In reverse, look directly behind you. At all events, avoid reversing long distances.
- If visibility of your road is inadequate, ask someone to help, standing outside the area in which the platform will be moving, and make sure you always have a good view of this person.

E - STARTING-UP THE ENGINE-POWERED PLATFORM

SAFETY INSTRUCTIONS

- If using an emergency battery for start-up, use a battery with the same characteristics and respect battery polarity when connecting it. Connect the positive terminal first, and then the negative terminal.

⚠ IMPORTANT ⚠

Failure to respect polarity between batteries can cause serious damage to the electrical circuit.

The electrolyte in the battery may produce an explosive gas.

Avoid flames and generation of sparks close to the batteries. Never disconnect a battery while it is being charged.

INSTRUCTIONS: ◁ 2 - DESCRIPTION.

E - STARTING UP THE ELECTRIC-POWERED PLATFORM

SAFETY INSTRUCTIONS

- Do not use the platform if the battery is discharged to the point that movements are slowed down. In certain cases, the platform may stop (◁ 2 - DESCRIPTION for the charge level not to be exceeded).

INSTRUCTIONS: ◁ 2 - DESCRIPTION.

647772 (16/09/2020)
260 TJ-XP ST3A S1 / 280 TJ-X ST3A S1

F - OPERATING THE PLATFORM

SAFETY INSTRUCTIONS

⚠ IMPORTANT ⚠

Operators should be aware of the risks connected with using the platform, notably:
- Risk of losing control.
- Risk of losing lateral and frontal stability of the platform.
The operator must remain in control of the platform.

- Do not carry out operations which exceed the capacities of your platform.
- Familiarise yourself with the platform on the terrain where it will be used.
- Ensure that the brakes work efficiently when stopping a travelling movement, taking into account the braking distances.
- Drive smoothly and adapt the platform speed to the operating conditions (site configuration, load in the basket).
- In all circumstances make sure you are in control of your speed.
- Take extreme care when manoeuvring the platform with the basket in the high position. Ensure that there is sufficient visibility.
- Take bends slowly.
- Look where you are going and always make sure you have good visibility along the route.
- Drive round obstacles.
- Never drive on the edge of a ditch or steep slope.
- Travel slowly on damp, slippery or uneven terrain or on truck ramps.
- Always remember that the hydraulic steering is very sensitive to movements.
- Never leave the I.C. engine on when the platform is unattended.
- Whatever your travelling speed, you must reduce the speed as much as possible before stopping.
- The platform should be operated in an area free of any obstructions or danger when it is lowered to the ground.
- Pay attention to structures, objects and people when manoeuvring.
- The operator using the platform must be aided on the ground by a person with adequate training.
- Remain within the limits of the platform's diagram (◅ 2 - DESCRIPTION).
- Do not load the basket if the platform needs to travel on a steep slope.

INSTRUCTIONS

- When moving the platform a long distance, always travel in transport position or with the scissors in the low position (◅ 2 - DESCRIPTION).
- DIESEL PLATFORM: Engage the appropriate gear (◅ 2 - DESCRIPTION).

G - STOPPING THE PLATFORM

SAFETY INSTRUCTIONS

- Never leave the ignition key in the platform during the operator's absence.
- Make sure that the platform is not stopped in any position that will interfere with the traffic flow and in particular the platform should not be less than one metre from a railway track.
- In the event of prolonged parking on a site, protect the platform from bad weather, particularly from frost (DIESEL PLATFORM: Check the level of antifreeze), and close and lock all the platform cowlings (if applicable).
- Park the platform on level ground.

INSTRUCTIONS: ◅ 2 - DESCRIPTION.

DIESEL PLATFORM

- Before stopping the platform after a long working period, leave the I.C. engine idling for a few moments, to allow the coolant and oil to lower the temperature of the I.C. engine and transmission.

⚠ IMPORTANT ⚠

Do not forget this precaution, in the event of frequent stops or warm stalling of the engine, or else the temperature of certain parts will rise significantly due to the stopping of the cooling system, with the risk of badly damaging such parts.

INSTRUCTIONS FOR WELDING AND BLOW TORCH WORK ON AN EXTERNAL STRUCTURE

⚠ IMPORTANT ⚠

Ensure that there are no hydraulic or electrolyte leaks on the platform.

⚠ IMPORTANT ⚠

When welding, work in the opposite direction from the control console to avoid sparks damaging it.

Any welding and cutting (blow torch) work from the basket on a building's metallic structures requires the following precautions to be taken:

A - WITH AN ELECTRICAL WELDING SET

- It is essential that the machine has a discharge braid connecting the chassis of the platform to the ground.
- The external structure to be welded must, without fail, be grounded. If the above conditions are observed, the platform can, in this case, be in contact with the structure or the elements to be welded without damaging the electronic components.
- The power supply to the welding equipment must be via a grounded socked, including the extension lead if required.
- In all cases, make sure that there are no electric arcs in the basket or on the platform (contact between the rod or torch and ground plug of the welding equipment). For this the ground plug of the welding equipment must never be placed on the platform's basket; it must only be placed as close as possible to the part to be welded.
- Switch off the welding equipment before disconnecting the ground clamp from the element or elements to be welded.

B - WITH A BLOW TORCH

- Attach the blow torch's bottles to the basket's frame.
- Sparks and clippings must not be directed towards the batteries.
- Do not set the blow torch down on the floor of the basket while it is still operating or point it towards the control panel or its power supply harness.

PLATFORM MAINTENANCE INSTRUCTIONS

GENERAL INSTRUCTIONS

- Read the operator's manual carefully.
- Wear clothes suitable for the maintenance of the lift truck, avoid wearing jewellery and loose clothes. Tie and protect your hair, if necessary.
- DIESEL PLATFORM:
  - Make sure the area is adequately ventilated before starting up the platform.
  - Stop the engine before conducting any work on the platform, switch off the platform and turn the battery cut-off to the OFF position (according to model).
- ELECTRIC PLATFORM: Switch off the platform before carrying out any work on the platform and turn the battery cut-off to the OFF position.
- Carry out all repairs immediately, even if the repairs concerned are minor.
- Repair all leaks immediately, even if the leak concerned is minor.
- Ensure that process materials and of spare parts are disposed in all safely and in an ecological manner.
- Be careful of the risk of burning and splashing (exhaust, radiator, engine, etc.).

MAINTENANCE

- Perform the periodic service (◁ 3 - MAINTENANCE) to keep your platform in good working condition. Failure to perform the periodic service may void the contractual guarantee.

MAINTENANCE LOGBOOK

- The maintenance operations carried out in accordance with the recommendations given in chapter 3 - MAINTENANCE and the other inspection, servicing or repair operations or modifications performed on platform shall be recorded in a maintenance logbook. The entry for each operation shall include details of the date of the works, the names of the individuals or companies having performed them, the type of operation and its frequency, if applicable. The part numbers of any platform items replaced shall also be indicated.

LUBRICANT AND FUEL LEVELS

- Use the recommended lubricants (never use contaminated lubricants).

DIESEL PLATFORM

- Do not fill the fuel tank when the engine is running.
- Only fill up the fuel tank in areas specified for this purpose.
- Do not smoke or approach the platform with a flame, when the fuel tank is open or is being filled.

BATTERY ELECTROLYTE LEVEL (ELECTRIC PLATFORM)

- Check the electrolyte level of the battery or batteries.

⚠ IMPORTANT ⚠

Ensure you take all the safety precautions when performing this operation (◁ 3 - MAINTENANCE).

HYDRAULICS

- Any work on the hydraulic circuit is forbidden except for the operations described in chapter 3 - MAINTENANCE.
- Do not attempt to loosen connections, hoses or any hydraulic component with the circuit under pressure.

⚠ IMPORTANT ⚠

COUNTERBALANCE VALVE: It is dangerous to change the setting or remove the counterbalance valves or safety valves which may be fitted to your platform cylinders. These operations must only be performed by approved personnel (consult your dealer).

HYDRAULIC ACCUMULATOR (according to model): dismantling hydraulic accumulators and their pipes that may be fitted on your platform is dangerous. These operations must only be performed by approved personnel (consult your dealer).

647772 (16/09/2020)
260 TJ-XP ST3A S1 / 280 TJ-X ST3A S1

ELECTRICITY

- Do not drop metallic items on the battery (between the positive and negative terminal(s)).
- Disconnect the battery or batteries before working on the electrical circuit.
- The control panels on the ground and in the basket and all other electrical control boxes must only be opened by authorised personnel.

TILT SENSOR

⚠ IMPORTANT ⚠

Some platforms are fitted with a tilt sensor attached to the turn table (◁ 2 - DESCRIPTION: CONTROL PANEL AND SAFETY DEVICES AT GROUND LEVEL); always carry out an initialisation after dismounting/refitting the tilt sensor. Refer to the platform repair manual.
Some platforms are fitted with a tilt sensor that is integrated in the ground level control panel (◁ 2 - DESCRIPTION: CONTROL PANEL AND SAFETY DEVICES AT GROUND LEVEL); always carry out a calibration of the tilt sensor after dismounting/refitting or loosening/tightening the ground level control panel, its mounting plates or fixing screws. Refer to the platform repair manual.

WELDING ON THE ACCESS PLATFORM

- Disconnect the battery or batteries before welding on the platform.
- When carrying out electric welding work on the platform, connect the negative cable from the welding equipment directly to the part being welded, so as to avoid high tension current passing through the alternator or the ring gear.
- If the platform is equipped with electronic controls, disconnect them before starting to weld, to avoid the risk of causing irreparable damage to electronic components.

⚠ IMPORTANT ⚠

Welding operations for the purposes of maintenance or repairs must only be carried out by persons authorised by MANITOU.

WASHING THE PLATFORM

- Clean the platform or at least the area concerned before any intervention.
- Remember to close and lock (if applicable) all the platform's cowlings.
- When cleaning with a high pressure cleaner, avoid air from entering the engine, the piston rod wiper seals, the hinges, the structural components and the electrical connections, etc.
- If necessary, protect components likely to be damaged, and in particular the electrical components (variable speed drive, charger) and electrical connections and the injection pump from penetration by water, steam or cleaning products.
- Dry the electrical components.
- Clean the platform of any fuel, oil or grease trace.
- Grease the axles, pins, ring gear, etc.

IF THE PLATFORM IS NOT TO BE USED FOR A LONG TIME

INTRODUCTION

The following recommendations are intended to prevent the platform from being damaged when it is withdrawn from service for an extended period.

⚠ IMPORTANT ⚠

Procedures to follow if the platform is not to be used for a long time and for starting it up again afterwards must be performed by your dealership.
This period of long-term stoppage must not exceed 12 months.

PREPARING THE PLATFORM

- Clean the platform thoroughly.
- Check and repair any leaks of fuel, oil, water, etc.
- Replace or repair any worn or damaged parts.
- Touch up the paintwork if necessary.
- Make sure the cylinder rods are in the retracted position (if applicable).
- Shut down the platform.
- Release the pressure in the hydraulic circuits.

PROTECTING THE ENGINE (DIESEL PLATFORM)

- Fill the tank with fuel (◁ 3 - MAINTENANCE).
- Replace the engine oil and oil filter (◁ 3 - MAINTENANCE).
- Drain and replace the coolant (◁ 3 - MAINTENANCE).
- Disconnect the battery and store it in a safe place away from the cold, after charging it to a maximum.
- Block the outlet with waterproof adhesive tape.
- Remove the belts and store them in a safe place.
- Disconnect the engine cut-off solenoid on the injection pump and carefully insulate the connection.

BATTERY CHARGING (ELECTRIC PLATFORM)

- In order to preserve battery life and capacity, check them periodically and keep the charge level constant (◁ 2 - DESCRIPTION).
- Do not leave the battery charger connected during a lightning storm.

PROTECTING THE PLATFORM

- Protect cylinder rods which are not be retracted from corrosion.
- Wrap the wheels.

NOTE: If the platform is to be stored outdoors, cover it with a waterproof tarpaulin.

BRINGING THE PLATFORM BACK INTO SERVICE

DIESEL PLATFORM

- Remove the protection from the cylinder rods and wheels.
- Refit and reconnect the battery.
- Remove the waterproof adhesive tape from the exhaust outlet.
- Empty and replace the fuel and replace the fuel filter (◁ 3 - MAINTENANCE).
- Refit the belts and adjust their tension (◁ 3 - MAINTENANCE).
- Reconnect the engine cut-off solenoid.

⚠ IMPORTANT ⚠

Make sure the area is adequately ventilated before starting up the platform.

- Start up the platform, following the safety instructions and regulations.
- Perform the daily maintenance operations (◁ 3 - MAINTENANCE).

DIESEL AND ELECTRIC PLATFORM

- Lubricate the platform completely (◁ 3 - MAINTENANCE).
- Carry out all the lifting system's hydraulic movements right up to the limit switches for each cylinder.

647772 (16/09/2020)
260 TJ-XP ST3A S1 / 280 TJ-X ST3A S1

DISPOSING OF THE PLATFORM

⚠ IMPORTANT ⚠

Consult your dealer before disposing of your platform.

RECYCLING OF MATERIALS

METALS

- Metals are 100 % recoverable and recyclable.

PLASTICS

- Plastic parts are identified with a marking in accordance with current regulations.
- A limited range of materials is used to simplify the recycling process.
- The majority of plastic components are made of "thermoplastic" plastics, which are easily recycled by melting, granulating or grinding.

RUBBER

- Tyres and seals can be ground for use in cement manufacture or to obtain reusable granules.

GLASS

- Glass items can be removed and collected for processing by glaziers.

ENVIRONMENTAL PROTECTION

By entrusting the maintenance of your platform to the MANITOU network, the risk of pollution is limited and the contribution to environmental protection is made.

WORN OR DAMAGED PARTS

- Do not dump them in the countryside.
- MANITOU and its network have signed-up to a scheme of environmental protection through recycling.

USED OIL

- The MANITOU network organises the collection and processing of used oil.
- By handing over your waste oil to MANITOU, the risk of pollution is limited.

USED BATTERIES

- Do not throw away batteries, as they contain metals that are harmful for the environment.
- Return them to the MANITOU network or any other approved collection point.

NOTE: MANITOU aims to manufacture platforms that provide the best performance and limit polluting emissions.

2 - DESCRIPTION

2 - DESCRIPTION

STICKERS 2-4

IDENTIFICATION OF THE PLATFORM 2-18

SPECIFICATIONS 2-20

DIMENSIONS AND DIAGRAM 260 TJ-XP ST3A S1 2-24

DIMENSIONS AND DIAGRAM 280 TJ-X ST3A S1 2-26

SAFETY COMPONENTS 2-28

CONTROL PANEL AND SAFETY DEVICES AT GROUND LEVEL 2-29

CONTROL PANEL AND SAFETY DEVICES IN THE BASKET 2-30

REMOTE CONTROL UNIT 2-32

SCREEN DISPLAY - DESCRIPTION OF PAGES 2-52

DEFINITION OF SUB-MENUS 2-55

PLATFORM OPERATION 2-58

TRANSPORTING THE PLATFORM 2-64

RESCUE PROCEDURE 2-70

OPTIONS 2-74

STICKERS

⚠ IMPORTANT ⚠

Clean all stickers so that they are legible.
Any stickers which are illegible or damaged must be replaced.
Check that the stickers are present after replacing any spare parts.

1 - WHITE ARROW ..... Part No. 833553 2-6
2 - BLACK ARROW ..... Part No. 833554 2-6
3 - BASKET SAFETY INSTRUCTIONS 260 TJ-XP ST3A S1 ..... Part No. 52514665 2-6
4 - BASKET SAFETY INSTRUCTIONS 280 TJ-X ST3A S1 ..... Part No. 318457 2-6
5 - GROUND SAFETY INSTRUCTIONS ..... Part No. 685608 2-7
6 - WHEEL LOAD 260 TJ-XP ST3A S1 ..... Part No. 52523351 2-7
7 - WHEEL LOAD 280 TJ-X ST3A S1 ..... Part No. 833552 2-7
8 - DANGER OF CRUSHING HANDS ..... Part No. 676988 2-7
9 - DANGER KEEP AWAY ..... Part No. 679450 2-7
10 - DANGER OF CRUSHING ..... Part No. 679452 2-8
11 - DANGER ROTATING PART ..... Part No. 683108 2-8
12 - DANGER HOT COMPONENT ..... Part No. 683112 2-8
13 - WASHING INSTRUCTION ..... Part No. 313672 2-8
14 - HARNESS ATTACHMENT POINT ..... Part No. 834438 2-8
15 - LOCATION OF EMERGENCY STOP BUTTONS ..... Part No. 834644 2-9
16 - JIB ANGLE ..... Part No. 833523 2-9
17 - JIB ZERO/ X-Y /TURNTABLE ORIENTATION ..... Part No. 833675 2-9
18 - BACKUP PUMP ..... Part No. 833549 2-9
19 - EMERGENCY CONTROL PROCEDURE (DISTRIBUTOR) ..... Part No. 833548 2-10
20 - EMERGENCY CONTROL PROCEDURE (VALVE) ..... Part No. 833547 2-10
21 - TURNTABLE LOCKING (depending on version) ..... Part No. 52673636 2-10
22 - PLATFORM EXTENSION/RETRACTION 260 TJ-XP ST3A S1 ..... Part No. 52515335 2-11
23 - PLATFORM EXTENSION/RETRACTION 280 TJ-X ST3A S1 ..... Part No. 833703 2-11
24 - ANCHORAGE POINT ..... Part No. 833041 2-11
25 - ANCHORING (depending on version) 260 TJ-XP ST3A S1 ..... Part No. 52685387 2-12
26 - ANCHORING (depending on version) 280 TJ-X ST3A S1 ..... Part No. 52685388 2-12
27 - LIFTING POINT (depending on version) ..... Part No. 833291 2-12
28 - LIFTING (depending on version) ..... Part No. 52657841 2-12
29 - HYDRAULIC OIL ..... Part No. 597652 2-12
30 - DIESEL ..... Part No. 683437 2-13
31 - ANTIFREEZE ..... Part No. 52501046 2-13
32 - BATTERY LOCATION ..... Part No. 52509705 2-13
33 - POWER FUSES (first version) ..... Part No. 52563677 2-13
34 - POWER FUSES (second version) ..... Part No. 52571680 2-13
35 - REMOTE LUBRICATION ..... Part No. 834206 2-14
36 - CABLE ADJUSTMENT ..... Part No. 833559 2-14
37 - FAULT CODES ..... Part no. 833687 2-14
38 - BRAKE UNIT COILS ..... Part No. 833702 2-14
39 - TURNTABLE UNIT COILS ..... Part No. 833700 2-14
40 - BASKET/JIB BLOCK COILS AND TILT SENSORS 260 TJ-XP ST3A S1 ..... Part No. 52568744 2-15
41 - BASKET/JIB BLOCK COILS AND TILT SENSORS 280 TJ-X ST3A S1 ..... Part No. 834211 2-15
42 - TURNTABLE ROTATION SENSORS ..... Part No. 833688 2-15
43 - MAIN ARM ANGLE SENSORS ..... Part No. 833696 2-15
44 - OVERLOAD SENSORS 260 TJ-XP ST3A S1 ..... Part No. 52523374 2-16
45 - OVERLOAD SENSORS 280 TJ-X ST3A S1 ..... Part No. 833694 2-16
46 - LOAD CHART SENSORS 260 TJ-XP ST3A S1 ..... Part No. 52523378 2-16
47 - LOAD CHART SENSORS 280 TJ-X ST3A S1 ..... Part No. 833697 2-16
48 - RESET BUTTON SPS (OPTION) ..... Part No. 52676715 2-16
49 - ELECTRICAL SAFETY DISTANCES ..... Part No. 834436 2-17
50 - USE MANITOU APPROVED TYRE ONLY ..... Part No. 834437 2-17
51 - DANGER OF BURNS ..... Part No. 683109 2-17

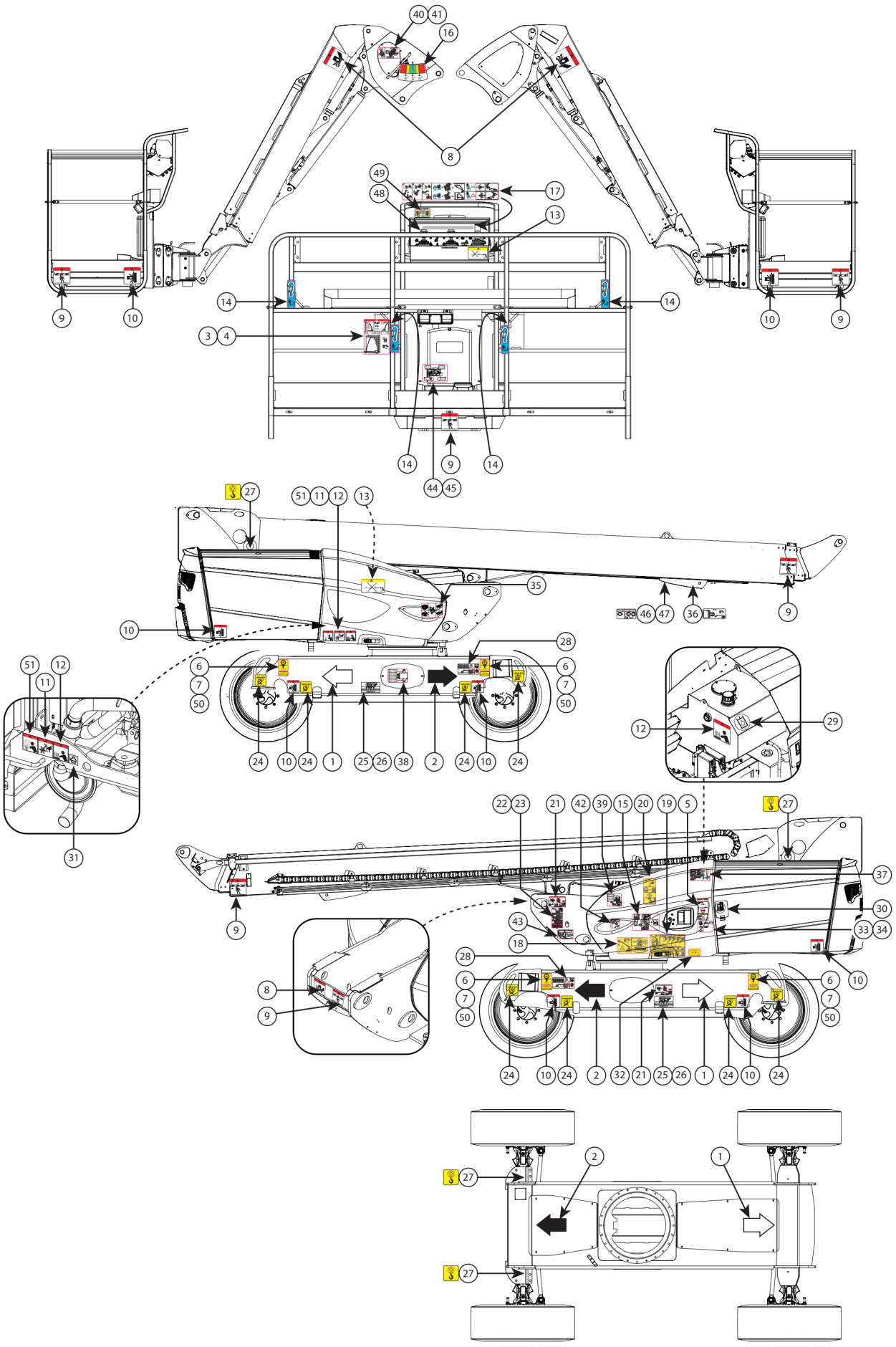
40 41 16 8 49 48 17 13 9 10 14 3 4 14 10 9 14 9 14 44 45
27 51 11 12 13 35 46 47 36 9 10 28 6 7 50 24 10 24 1 25 26 38 2 24 10 24
51 11 12 31 12 29
22 23 21 42 39 15 20 19 5 27 37 30 43 33 34 18 28 6 7 50 10 9 8 9
24 10 24 2 32 21 25 26 1 24 10 24
2 27 1 27

1 - WHITE ARROW — Part No. 833553

Indicates forward driving direction, ◁ PLATFORM OPERATION: TRANSPORT/WORKING POSITION.

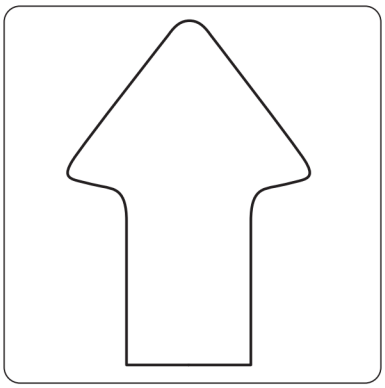

2 - BLACK ARROW — Part No. 833554

Indicates reverse driving direction, ◁ PLATFORM OPERATION: TRANSPORT/WORKING POSITION.



3 - BASKET SAFETY INSTRUCTIONS 260 TJ-XP ST3A S1 — Part No. 52514665

4 - BASKET SAFETY INSTRUCTIONS 280 TJ-X ST3A S1 — Part No. 318457

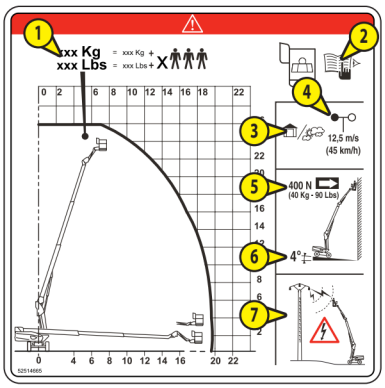

Indicates:

1: Maximum load capacity for the basket.

2: The safety and operating instructions must be read before starting the platform.

3: Operating the platform outside and inside.

4: Maximum wind speed when operating outside.

5: Maximum manual force.

6: Maximum tilt in working position.

7: The risk of electric shock.

NB: Each platform has its own specific capacity. Please refer to this sticker for your platform.

5 - GROUND SAFETY INSTRUCTIONS — Part No. 685608

Indicates:

1: The safety and operating instructions must be read before starting the platform.

2: The platform must not be towed in the event of breakdown.

3: It is strictly forbidden to direct a pressure washer nozzle over the control panels and electrical components.

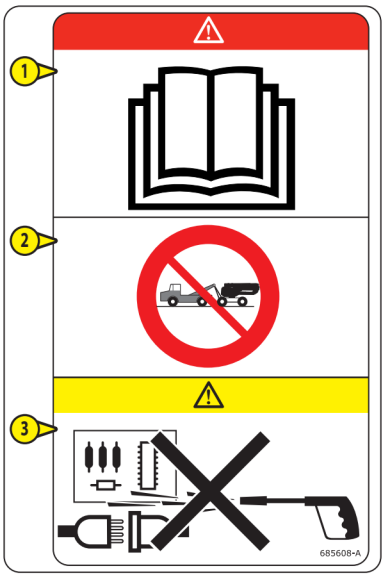

6 - WHEEL LOAD 260 TJ-XP ST3A S1 — Part No. 52523351

7 - WHEEL LOAD 280 TJ-X ST3A S1 — Part No. 833552

Indicates the maximum ground load per wheel.

NB: Each platform has its own specific wheel load. Please refer to this sticker to find out the value.

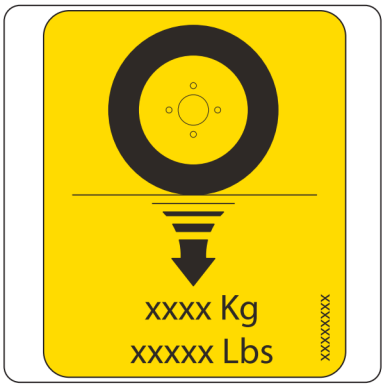

8 - DANGER OF CRUSHING HANDS — Part No. 676988

Indicates that it is strictly forbidden to place your hands or any other part of the body in the lifting mechanism components (arm, jib, basket, etc.).



9 - DANGER KEEP AWAY — Part No. 679450

Indicates that it is strictly forbidden to stand under the lifting mechanism (arm, jib, basket, etc.) or within the platform's operating area.



10 - DANGER OF CRUSHING — Part No. 679452

Indicates that it is strictly prohibited to stand in this area when the platform is moving. The components on which the stickers are present could crush you.



11 - DANGER ROTATING PART — Part No. 683108

Indicates that there is a high risk of severing fingers with the radiator fan.



12 - DANGER HOT COMPONENT — Part No. 683112

Indicates that there is a high risk of burns in the vicinity (silent engine, internal combustion engine, etc.).



13 - WASHING INSTRUCTION — Part No. 313672

Indicates that it is strictly forbidden to direct a high pressure cleaner nozzle over the control panels and electrical components or on the engine air intake.

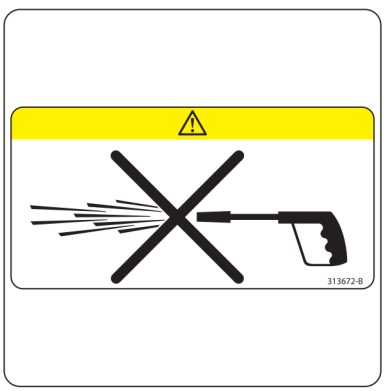

14 - HARNESS ATTACHMENT POINT — Part No. 834438

Indicates the location of safety harness attachment points, ◁ SAFETY COMPONENTS: HARNESS ATTACHMENT POINTS.



15 - LOCATION OF EMERGENCY STOP BUTTONS — Part No. 834644

Indicates the location of platform's emergency stop buttons.

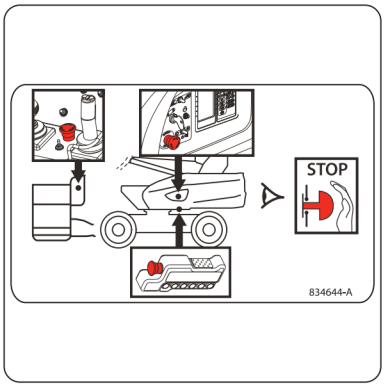

16 - JIB ANGLE — Part No. 833523

Indicates tilt angle of the basket/jib.

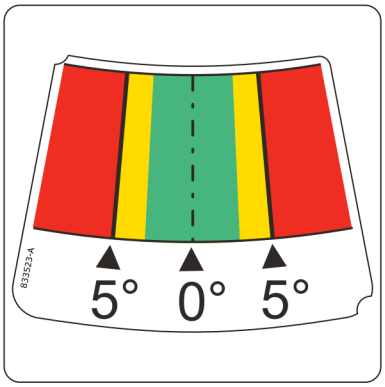

17 - JIB ZERO/ X-Y /TURNTABLE ORIENTATION — Part No. 833675

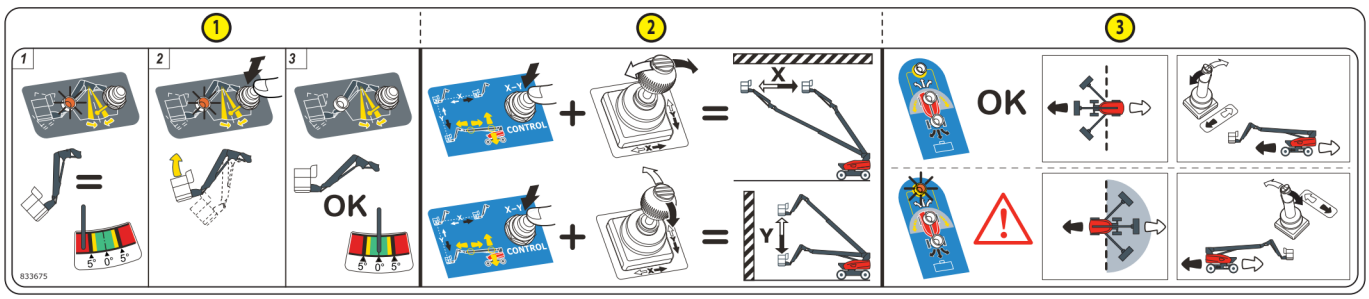

Indicates the procedure to be followed for:

1. : The basket/jib assembly zero position control, ◁ CONTROL PANEL AND SAFETY DEVICES IN THE BASKET: JIB ZERO POSITION WARNING LIGHT AND BUTTON.
2. : The control for functions X and Y, ◁ CONTROL PANEL AND SAFETY DEVICES IN THE BASKET: X-Y FUNCTION BUTTON.
3. : Find out the direction of travel when the turntable orientation is less than 90° and when the turntable orientation is greater than 90°, ◁ CONTROL PANEL AND SAFETY DEVICES IN THE BASKET: TURNTABLE ORIENTATION GREATER THAN 90° INDICATOR LIGHT.

18 - BACKUP PUMP — Part No. 833549

Indicates the procedure to be followed for using the backup pump, ◁ RESCUE PROCEDURE.



647772 (16/09/2020)
260 TJ-XP ST3A S1 / 280 TJ-X ST3A S1

19 - EMERGENCY CONTROL PROCEDURE (DISTRIBUTOR) Part No. 833548

Indicates the procedure to be followed for using the emergency controls for proportional distributor, ◁ RESCUE PROCEDURE.



20 - EMERGENCY CONTROL PROCEDURE (VALVE) Part No. 833547

Indicates the procedure to be followed for using the backup valve, ◁ RESCUE PROCEDURE.

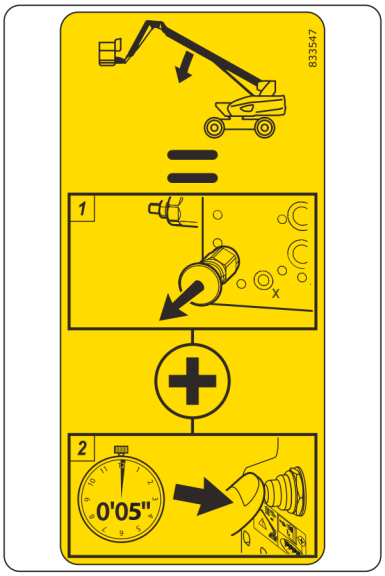

21 - TURNTABLE LOCKING (depending on version) Part No. 52673636

Indicates:

- That the turntable must be locked before loading the platform onto a flatbed truck, before unloading it and once it is on the flatbed.
- That turntable rotation is prohibited once on the flatbed.

NB: ◁ PLATFORM OPERATION: TRANSPORTING THE PLATFORM.

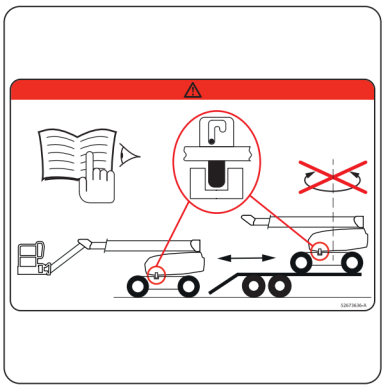

22 - PLATFORM EXTENSION/RETRACTION 260 TJ-XP ST3A S1 — Part No. 52515335

23 - PLATFORM EXTENSION/RETRACTION 280 TJ-X ST3A S1 — Part No. 833703

Indicates the procedure to be followed to extend/retract the platform, ◁ PLATFORM OPERATION: TRANSPORTING THE PLATFORM.

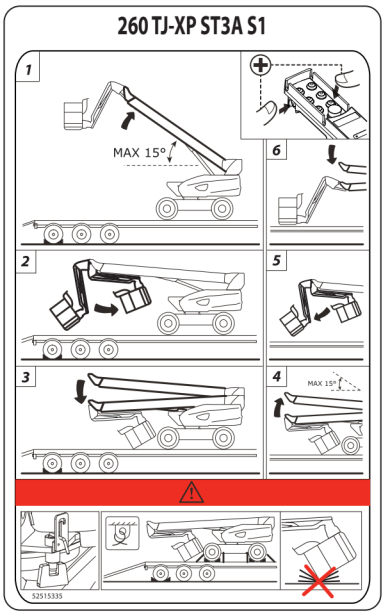

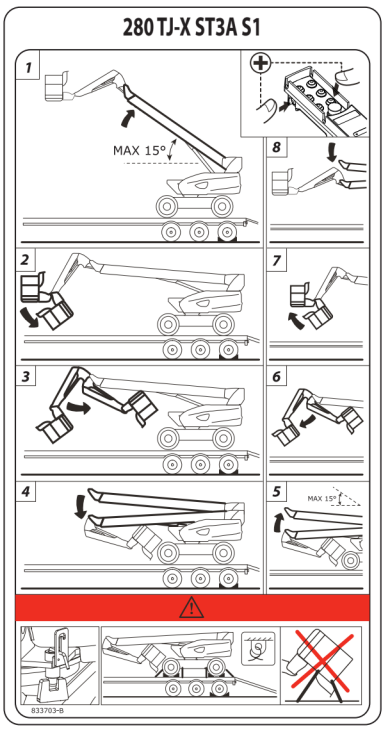

24 - ANCHORAGE POINT — Part No. 833041

Indicates the location of the platform's anchorage points, ◁ PLATFORM OPERATION: TRANSPORTING THE PLATFORM.

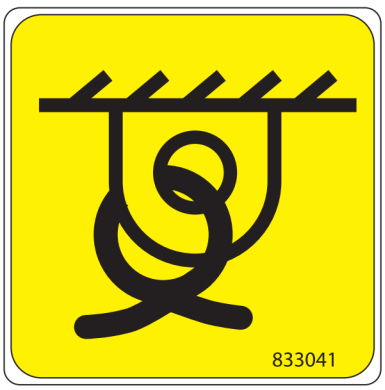

25 - ANCHORING (depending on version) 260 TJ-XP ST3A S1 — Part No. 52685387

26 - ANCHORING (depending on version) 280 TJ-X ST3A S1 — Part No. 52685388

Indicates the main features that are useful for anchoring the platform, ◁ PLATFORM OPERATION: TRANSPORTING THE PLATFORM.

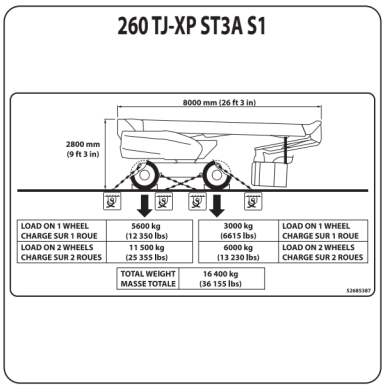

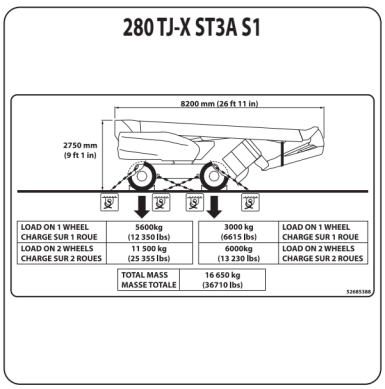

27 - LIFTING POINT (depending on version) — Part No. 833291

Indicates the location of the platform's lifting points, ◁ 3 - MAINTENANCE: OCCASIONAL OPERATION: LIFTING THE PLATFORM.

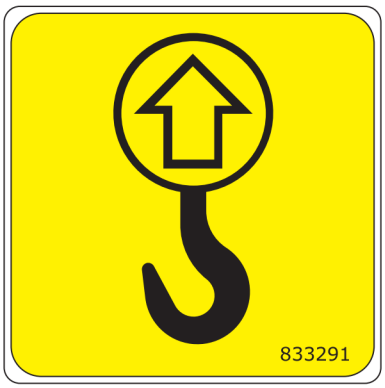

28 - LIFTING (depending on version) — Part No. 52657841

Indicates:

(1): The main features that are useful for lifting the platform.

(2): That the turntable must be locked before the platform is lifted.

NB: ◁ 3 - MAINTENANCE: OCCASIONAL OPERATION: LIFTING THE PLATFORM.

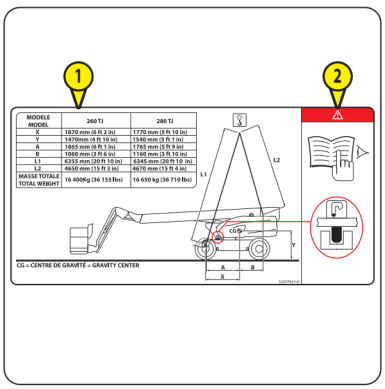

29 - HYDRAULIC OIL — Part No. 597652

This indicates that the tank is intended to contain only hydraulic oil.

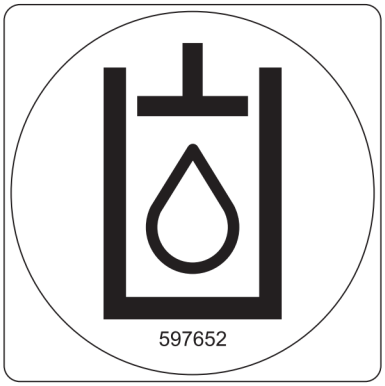

30 - DIESEL — Part No. 683437

This indicates that the tank is intended to contain only vehicle diesel fuel.



31 - ANTIFREEZE — Part No. 52501046

This indicates that there is antifreeze in the IC engine.

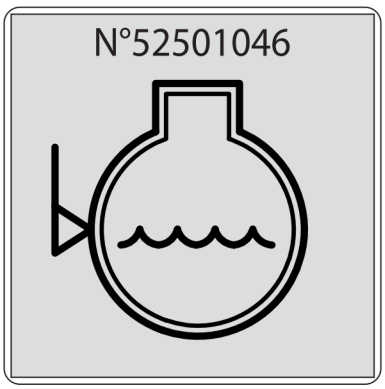

32 - BATTERY LOCATION — Part No. 52509705

Indicates location of battery.

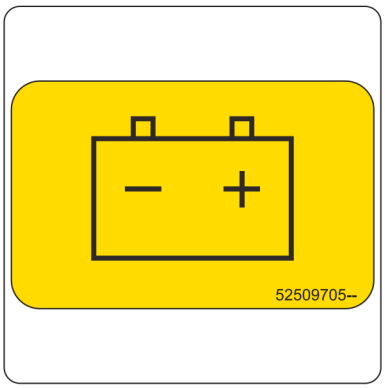

33 - POWER FUSES (first version) — Part No. 52563677

Indicates the location, amperage and allocation of power fuses.

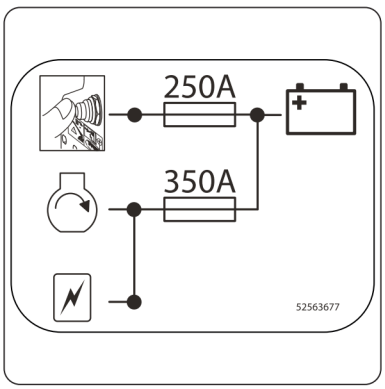

34 - POWER FUSES (second version) — Part No. 52571680

Indicates the location, amperage and allocation of power fuses.

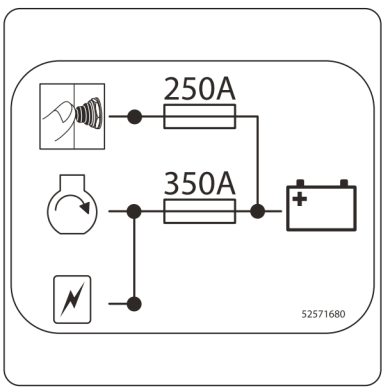

35 - REMOTE LUBRICATION — Part No. 834206

Indicates location and intended use of the remote lubricators for lubricating the turntable ring gear and the structure.

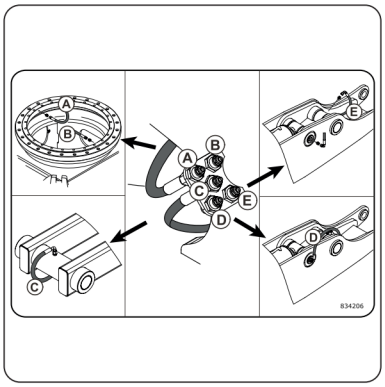

36 - CABLE ADJUSTMENT — Part No. 833559

Indicates the procedure to be followed to adjust the telescope cable tension.

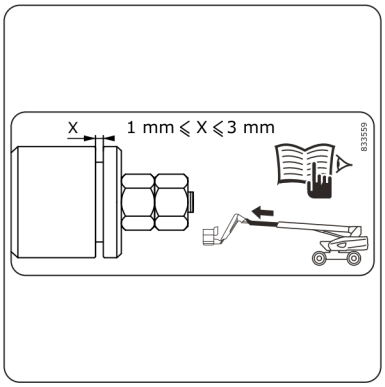

37 - FAULT CODES — Part no. 833687

Indicates the fault codes and location of the electrical components:

- Sensors (AS, DS, IS, TS).
- Electrovalves (EV).
- Solenoid coils (EW).

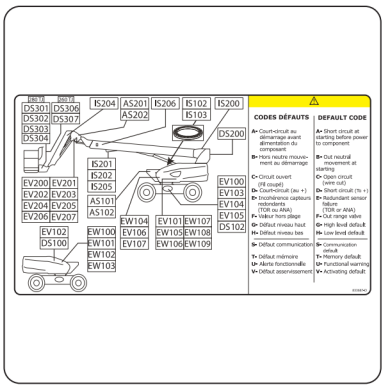

38 - BRAKE UNIT COILS — Part No. 833702

Indicates the location and fault codes of the brake unit coils.

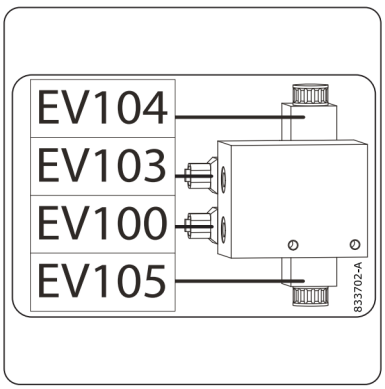

39 - TURNTABLE UNIT COILS — Part No. 833700

Indicates the location and fault codes of the turntable unit coils.

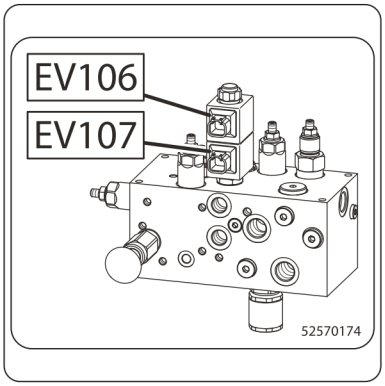

40 - BASKET/JIB BLOCK COILS AND TILT SENSORS 260 TJ-XP ST3A S1 Part No. 52568744

41 - BASKET/JIB BLOCK COILS AND TILT SENSORS 280 TJ-X ST3A S1 Part No. 834211

Indicates the location and fault codes of the /basket jib block coils and tilt sensors.

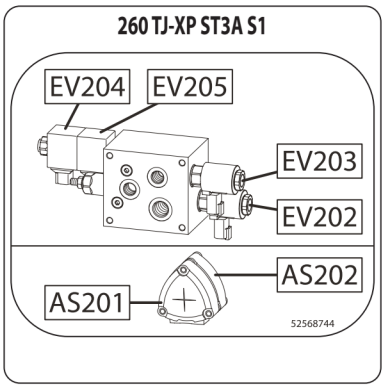

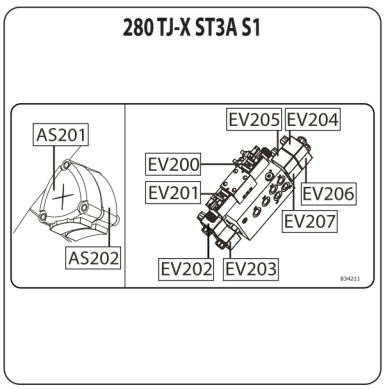

42 - TURNTABLE ROTATION SENSORS Part No. 833688

Indicates the location and fault codes of the turntable rotation coils.

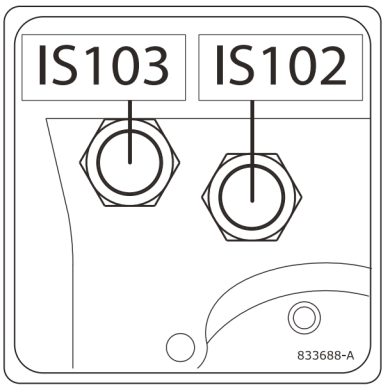

43 - MAIN ARM ANGLE SENSORS Part No. 833696

Indicates the location and fault code of the main arm angle sensor.

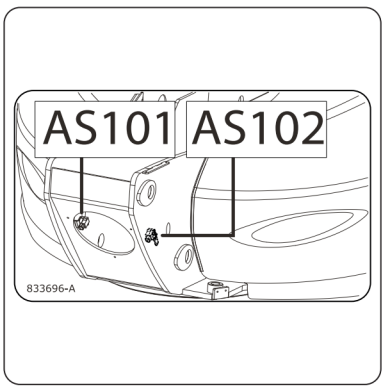

44 - OVERLOAD SENSORS 260 TJ-XP ST3A S1 — Part No. 52523374

260 TJ-XP ST3A S1

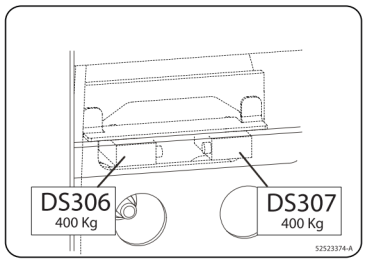

45 - OVERLOAD SENSORS 280 TJ-X ST3A S1 — Part No. 833694

Indicates the location and fault codes of the overload sensors.

280 TJ-X ST3A S1

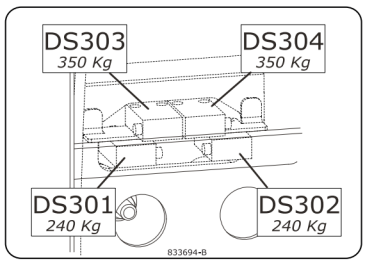

46 - LOAD CHART SENSORS 260 TJ-XP ST3A S1 — Part No. 52523378

260 TJ-XP ST3A S1

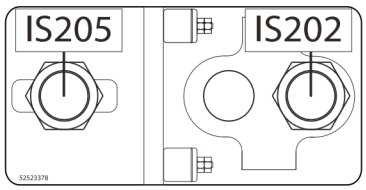

47 - LOAD CHART SENSORS 280 TJ-X ST3A S1 — Part No. 833697

Indicates the location and fault codes of the abacus sensors.

280 TJ-X ST3A S1

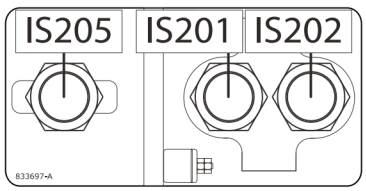

48 - RESET BUTTON SPS (OPTION) — Part No. 52676715

Indicates the location of the reset button SPS of the SECONDARY PROTECTION SYSTEM option SPS - FIRST VERSION and the SECONDARY PROTECTION SYSTEM option SPS - SECOND VERSION.

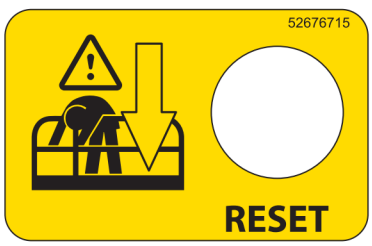

49 - ELECTRICAL SAFETY DISTANCES — Part No. 834436

Indicates the different areas in which the platform can be operated close to electrical power lines.

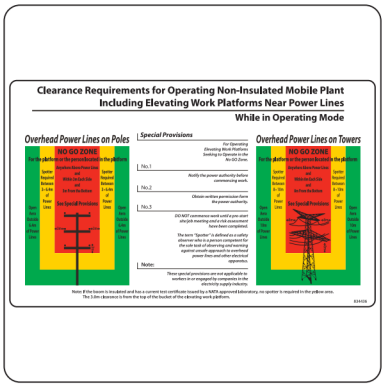

50 - USE MANITOU APPROVED TYRE ONLY — Part No. 834437

Indicates that the operator is using the tyres specified by Manitou.



51 - DANGER OF BURNS — Part No. 683109

Indicates that there is a significant risk of a spray of steam or boiling-hot liquid being released when turning the radiator filler cap.



IDENTIFICATION OF THE PLATFORM

As our policy is to promote constant improvement of our products, our range of platforms may undergo certain modifications, without obligation for us to advise our customers.

When you order parts, or when you require any technical information, always specify:

NB: We recommend that you write these numbers down in the places provided for this purpose when you receive the platform so that you can pass them on more easily when required.

PLATFORM MANUFACTURER'S PLATE

Illustrations: (#1) = first version, (#2) = second version.

The manufacturer's plate is fixed on the rear of the chassis.

"Designation" Designation	
"Year of manufacture" Year of manufacture	
"Model year" Model year	
"Unladen mass" Unladen weight	
"Nominal power" Rated power	
"Voltage" Voltage	
"Inside / Outside" Interior/Exterior	
"Maximum load" Maximum load	
"Maximum number of persons" Maximum number of people	
"Mass of equipment" Equipment weight	
"Manual forces" Manual forces	
"Maximum inclination" Maximum tilt	
"Maximum wind speed" Maximum wind speed	
"Serial Number" Serial number	

All other technical information for your platform is listed in the chapter: SPECIFICATIONS.





EWP ADDITIONAL INFORMATION PLATE

Illustrations: (#1) = first version chassis, (#2) = second version chassis.

Model	
Serial No.	
Date of commission	
Design registration No.	





ENGINE

"Model" Model	
"Serial No." Serial number	
"Code No." Code number	
"Type" Type	
"Family" Family	
"Approval number" Approval number	



HYDROSTATIC PUMP

"CNR" MANITOU Part No.	
"TYP" Codification	
"MNR" Manufacturing number	
"SN" Serial number	
"FD" Date of manufacture	

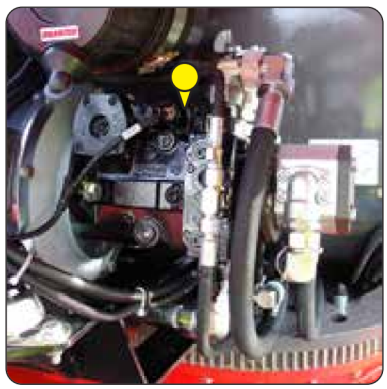

FRONT AXLE

"Type" Type	
"Serial No." Serial number	
"Model" Model	

REAR AXLE

"Type" Type	
"Serial No." Serial number	
"Model" Model	

647772 (16/09/2020)
260 TJ-XP ST3A S1 / 280 TJ-X ST3A S1

SPECIFICATIONS

LOAD SPECIFICATIONS		260 TJ-XP ST3A S1	280 TJ-X ST3A S1	±
Platform				
- Maximum load capacity in the basket	kg (lbs)	400 (881) **(1)**	**(2)**	-
- Maximum wind speed when operating outside	km/h	45		-
- Maximum number of people in the basket (indoor use/ outdoor use)		3 / 3 **(1)**	**(2)**	-
- Unladen platform weight	kg (lbs)	16,400 (36,155)	16,650 (36,710)	-
- Maximum authorised tilt in working position	°	4		0.1%
- Maximum slope accessible in transport position with 100 kg (220 lbs) in the basket	%	34.5		-
- Maximum authorised manual force	N	400		-
Wheels				
- Load on one front wheel (transport position)	kg (lbs)	5,675 (12,512)	5,500 (12,126)	10%
- Load on one rear wheel (transport position)	kg (lbs)	2,550 (5,622)	2,800 (6,173)	10%
- Maximum load on one wheel (working position)	kg (lbs)	9,500 (20,944)	10,500 (23,149)	-
- Bearing surface on ground (hard/soft)	cm^2	446/1,125	472 / 1,179	-
- Punching on ground (hard/soft)	daN/cm^2	21.3 / 8.44	22.25 / 8.91	-

(1): PIPE SUPPORT attachment or PANEL SUPPORT attachment not installed, ◁ 4-ATTACHMENTS for the specific values when an attachment is installed.

(2): ◁ DIMENSIONS AND DIAGRAM 280 TJ-X ST3A S1.

SPEEDS AND MOVEMENTS		260 TJ-XP ST3A S1	280 TJ-X ST3A S1	±
Driving speed				
- WORKING POSITION speed	km/h	0.8		0.1
- SLOW speed	km/h	1.8		-
- TORTOISE speed	km/h	2.5		0.2
- RAMP speed	km/h	2.5		0.2
- HARE speed	km/h	4.5		0.2
Main arm (telescope extended)				
- Unladen/laden lifting	s	70 / -		5
- Unladen/laden lowering	s	70 / -		5
Main arm (telescope retracted)				
- Unladen/laden lifting	s	45 / -		5
- Unladen/laden lowering	s	42 / -		5
Telescope				
- Unladen/laden extension	s	30 / -		5
- Unladen/laden retraction	s	30 / -		5
Jib - 260 TJ-XP ST3A S1				
- Unladen/laden lifting	s	22 / -	-	5
- Unladen/laden lowering	s	18 / -	-	5
Jib (telescope extended) - 280 TJ-X ST3A S1				
- Unladen/laden lifting	s	-	30 / -	5
- Unladen/laden lowering	s	-	25 / -	5
Jib (telescope retracted) - 280 TJ-X ST3A S1				
- Unladen/laden lifting	s	-	23 / -	5
- Unladen/laden lowering	s	-	18 / -	5
Jib telescope - 280 TJ-X ST3A S1				
- Unladen/laden extension	s	-	16 / -	5
- Unladen/laden retraction	s	-	13 / -	5
Turntable				
- 90° rotation (telescope extended/retracted/retracted and main arm raised)	s	50/30/28		5
Basket				
- Rotation 180° (left/right)	s	14 / 14		5

647772 (16/09/2020)
260 TJ-XP ST3A S1 / 280 TJ-X ST3A S1

ENGINE		260 TJ-XP ST3A S1	280 TJ-X ST3A S1	±
Type		KUBOTA V2403-M		-
Fuel		Diesel		-
Number of cylinders		4		-
Cubic capacity	cm^3	2,434		-
Idling speed unladen	rpm	1,050		50
Maximum speed unladen	rpm	2,550		20
Power at 3,000 rpm	kW	34.1		-
Maximum torque at 1,600 rpm	N.m	162.5		-
Unladen weight	kg (lbs)	184 (406)		5 (11)
Type of cooling		Coolant		-
Fan		Puller		-
Emissions				
- CO (carbon monoxide)	g/kWh	-		-
- HC + Nox (hydrocarbons + nitrogen dioxide)	g/kWh	-		-
- PT (particles)	g/kWh	-		-

TRANSMISSION		260 TJ-XP ST3A S1	280 TJ-X ST3A S1	±
Hydrostatic pump				
- Type		BOSCH REXROTH A4VG56		-
- Cubic capacity	cm^3	56		-
- Maximum unladen flow rate	L/min	-		-
- Maximum pressure	bar	400		5
Hydrostatic motor				
- Type		PARKER		-
- Cubic capacity	cm^3	125		-
Axles				
- Type		DANA SPICER		-
- Reduction ratio		47.06		-
- Pulling force	daN	5,850		-
- Front axle differential		45% limited slip		-
- Rear axle differential		Hydraulic locking 100%		-
Number of front/rear steering/directional wheels		2 / 2		-
Number of front/rear drive wheels		2 / 2		-
Wheels				
- Type		SOLIDEAL SOLIDAIR AWP		-
- Dimensions (external Ø x width)	mm	1,025 x 365		-
- Inflation		Solid tyre		-

BRAKE SYSTEM (parking brake)		260 TJ-XP ST3A S1	280 TJ-X ST3A S1	±
Type of brake		Negative		-
Type of control		Hydraulics		-
Braked wheels front/rear		2 / 2		-
Release (freewheel mode)		Yes, manual		-
Braking torque	daN.m	3,100 on wheel		-

647772 (16/09/2020)
260 TJ-XP ST3A S1 / 280 TJ-X ST3A S1

HYDRAULIC CIRCUIT		260 TJ-XP ST3A S1	280 TJ-X ST3A S1	±
Auxiliary hydraulic pump				
- Type		BOSCH REXROTH		-
- Cubic capacity	cm^3	28		-
- Maximum unladen flow rate	L/min	70		-
Distributor				
- Type		proportional electrovalve		-
- Maximum pressure	bar	250		5
Filtration				
- Suction	µm	125		-
- Pressure	µm	10		-
- Operation	µm	10		-

ELECTRIC CIRCUIT		260 TJ-XP ST3A S1	280 TJ-X ST3A S1	±
Battery				
- Type		EXIDE		-
- Capacity C5	Ah	145		-
- Capacity C20	Ah	-		-
- Rated voltage	V	12		-
Alternator				
- Type		-		-
- Maximum current	A	60		-
- Rated voltage	V	12		-
Starter				
- Type		Electric		-
- Power	kW	1.4		-
- Voltage	V	12		-

BACKUP PUMP		260 TJ-XP ST3A S1	280 TJ-X ST3A S1	±
- Type		Electric		-
- Cubic capacity	cm^3	2		-
- Power	kW	1.3		-
- Voltage	V	12		-
- Pressure 150 bars	A	-		-

DIMENSIONS		260 TJ-XP ST3A S1	280 TJ-X ST3A S1	±
Basket				
- External dimensions (length x width)	mm	2,300 x 900		1%
- Floor dimensions (length x width)	mm	2,235 x 840		1%
- Rotation angle right/left	°	90 / 90		-
Jib displacement angle up/down	°	70,3 / 63	56,8 / 62	1%
Turntable rotation angle	°	Continuous rotation		-
Other dimensions: ◁ DIMENSIONS AND DIAGRAM 260 TJ-XP ST3A S1 and DIMENSIONS AND DIAGRAM 280 TJ-X ST3A S1.				

NOISE AND VIBRATION		260 TJ-XP ST3A S1	280 TJ-X ST3A S1	±
Sound power level LwA	dB	106		-
Vibrations affecting body in the basket				
- Average quadratic values for the body	m/s^2	<0.5		-

647772 (16/09/2020)
260 TJ-XP ST3A S1 / 280 TJ-X ST3A S1

EQUIPMENT	260 TJ-XP ST3A S1	280 TJ-X ST3A S1	±
Orange rotating beacon light	Standard		-
Hour meter	Standard		-
Proportional diesel level display	Standard		-
Fuel/battery low level alarm	Standard		-
Tool box in basket	Standard		-
User interface (diagnostic aid)	Standard		-
Oscillating front axle	Standard		-
Turntable orientation more than 90° indicator light	Standard		-
Remote control unit	Standard		-
Permanent orange rotating beacon light	Option*		-
All movements alarm	Option*		-
Driving/steering alarm	Option*		-
Key lock for turntable covers	Option**		-
Battery cut-off	Option		-
230 V outlet in basket	Option		-
Generator 220 V/3.5 kW	Option**		-
Generator 220 V/5 kW	Option**		-
Working light	Option		-
Secondary protection system SPS - first version	Option**		-
Secondary protection system SPS - second version	Option**		-
Pipe support	◁ 4 - Attachments		-
Panel support	◁ 4 - Attachments		-

*: ◁ DEFINITION OF SUB-MENUS.

**: ◁ OPTIONS.

DIMENSIONS AND DIAGRAM 260 TJ-XP ST3A S1

A	mm	10,840
A1	mm	7,880
B	mm	2,800
C	mm	2,710
C1	mm	2,800
D	mm	2,480
E	mm	415
F	mm	355
G	mm	480
H	mm	1,975
I	mm	4,355
J	mm	4,420
K	mm	5,180
L	mm	9,280
M	mm	6,850
N	mm	4,000
O	mm	5,240
P	°/%	36 / 73

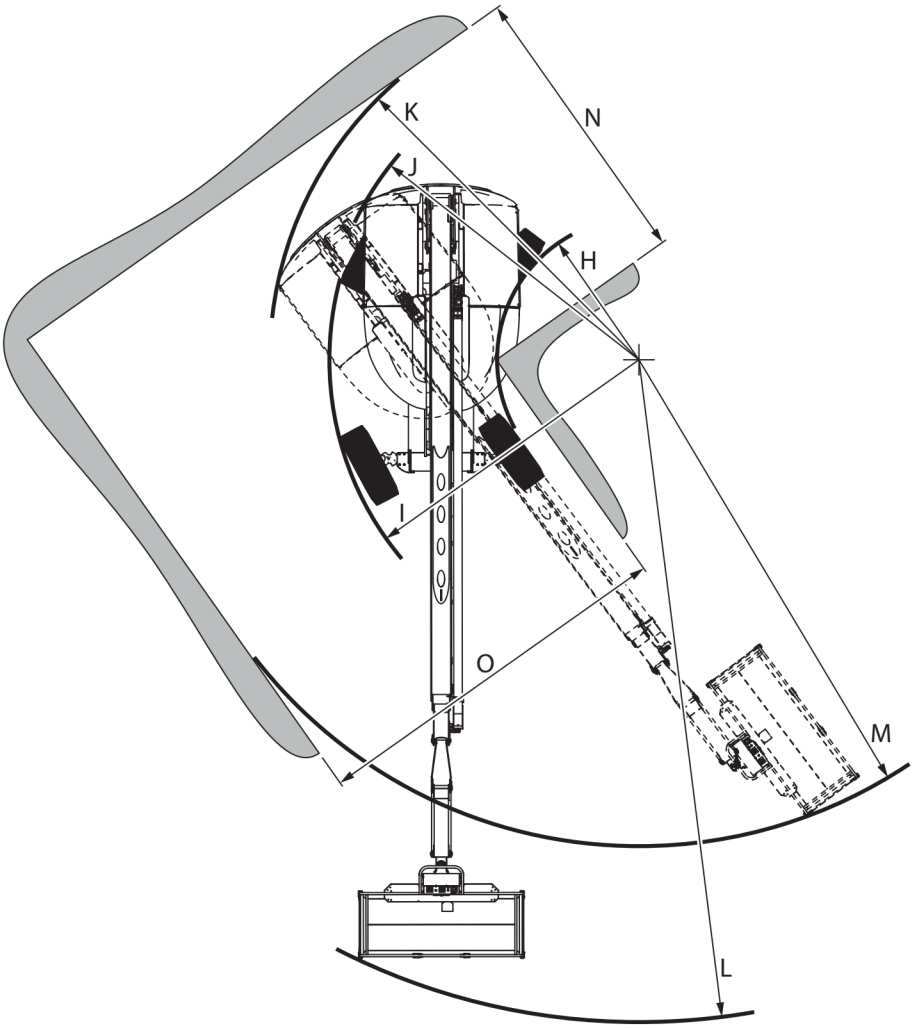

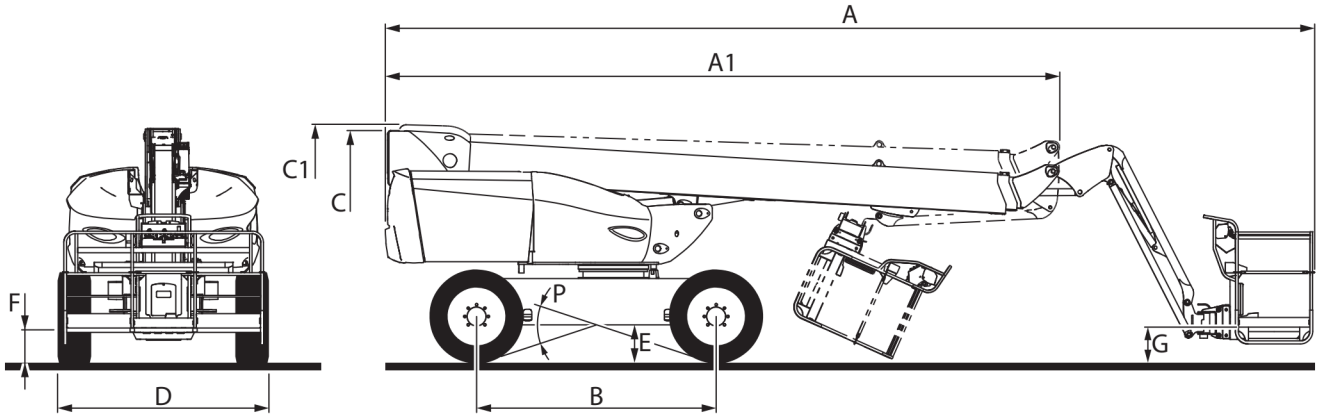

647772 (16/09/2020)
260 TJ-XP ST3A S1 / 280 TJ-X ST3A S1

D1	mm	19,200
H1	mm	2,785
D2	mm	8,285
H2	mm	23,890
H3	mm	195

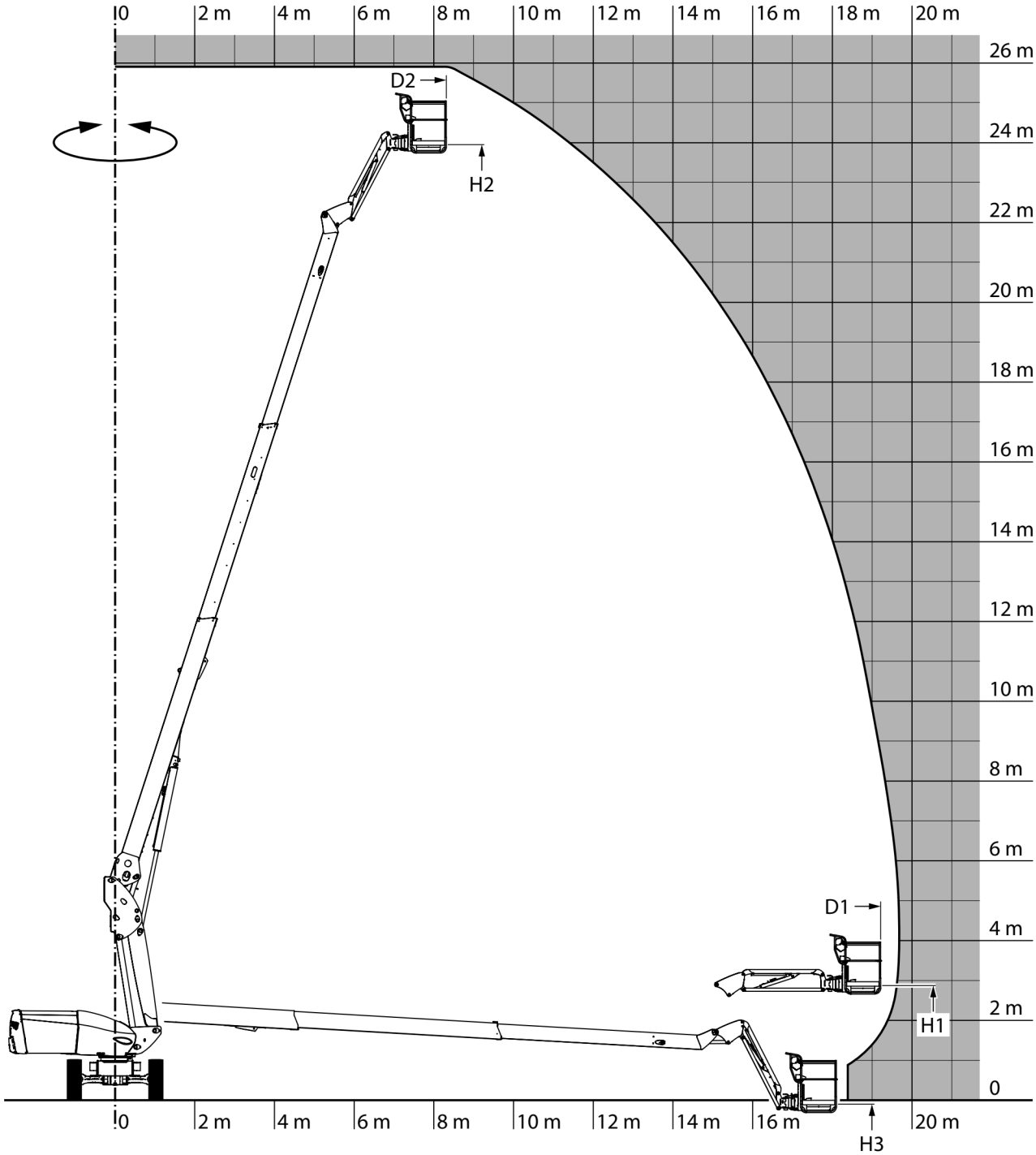

647772 (16/09/2020)
260 TJ-XP ST3A S1 / 280 TJ-X ST3A S1

DIMENSIONS AND DIAGRAM 280 TJ-X ST3A S1

A	mm	11,355
A1	mm	8,095
B	mm	2,800
C	mm	2,730
C1	mm	2,710
D	mm	2,480
E	mm	415
F	mm	355
G	mm	485
H	mm	1,975
I	mm	4,355
J	mm	4,420
K	mm	5,180
L	mm	9,750
M	mm	7,340
N	mm	4,000
O	mm	5,730
P	°/%	36 / 73

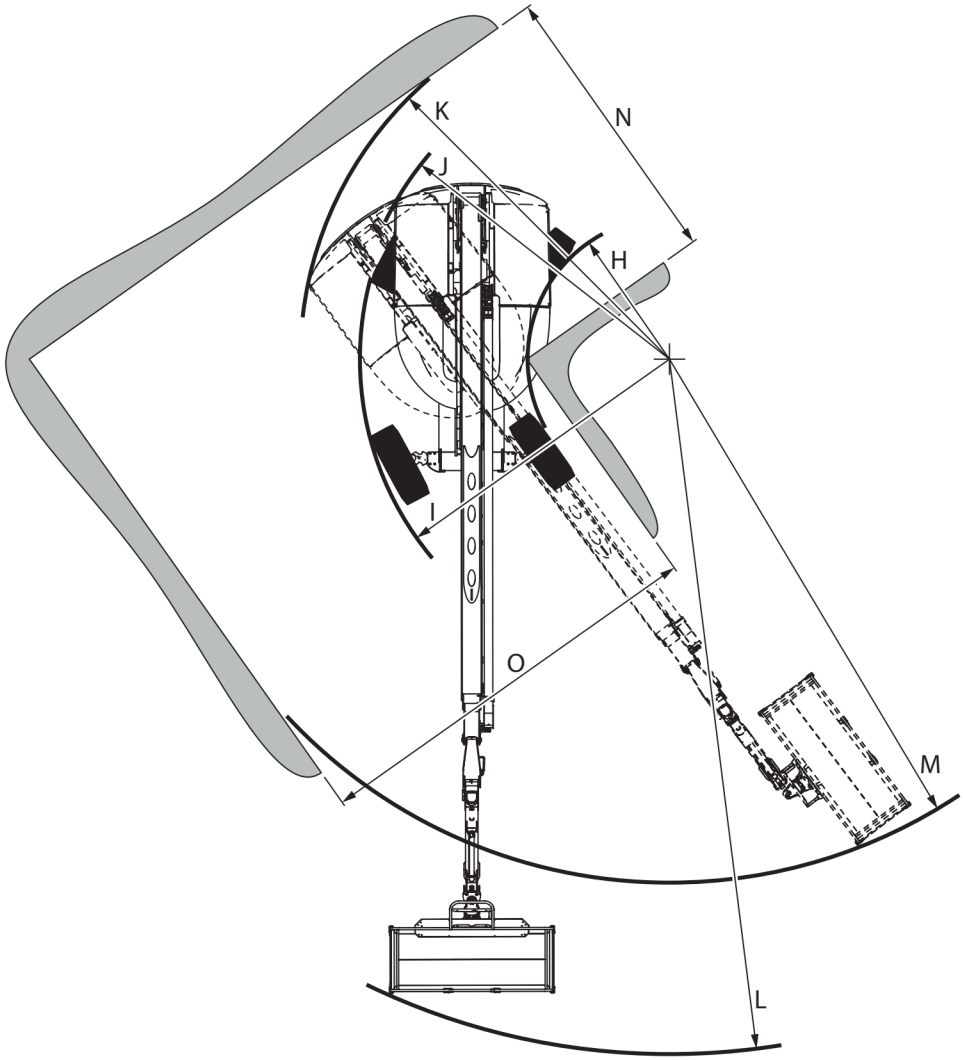

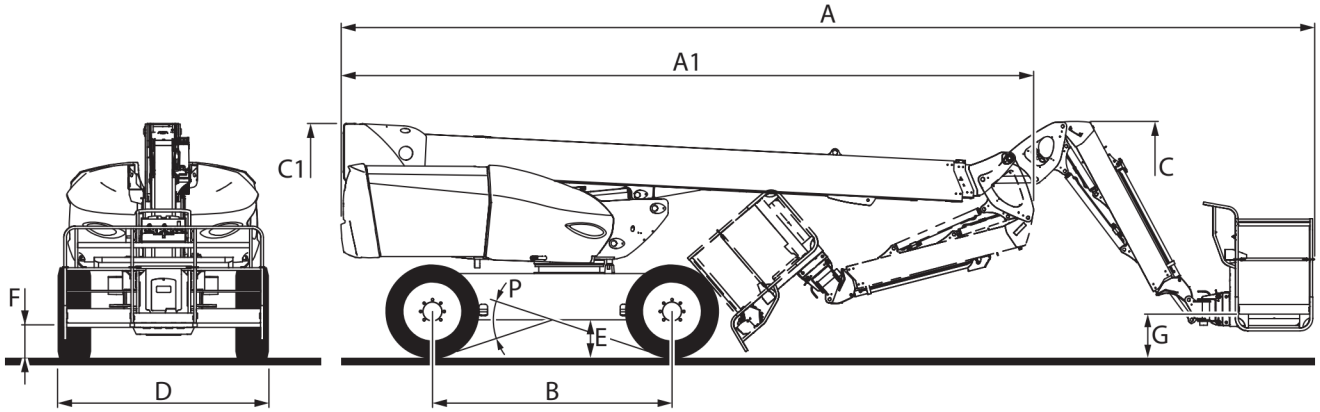

647772 (16/09/2020)
260 TJ-XP ST3A S1 / 280 TJ-X ST3A S1

D1	mm	20,950
H1	mm	3,035
D2	mm	9,100
H2	mm	25,735
D3	mm	18,950
H3	mm	1,165

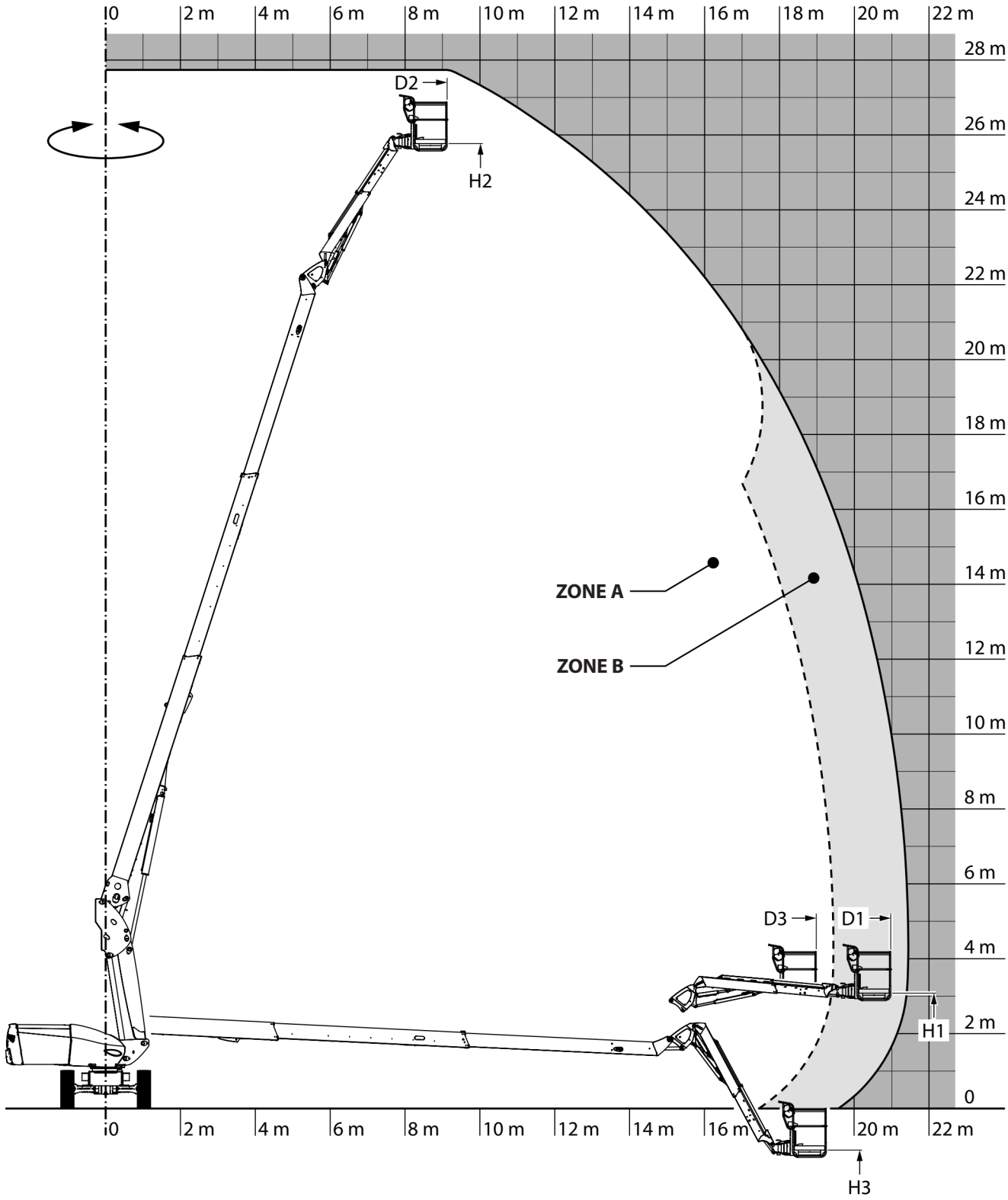

LOAD SPECIFICATIONS		ZONE A	ZONE B	±
Platform				
- Maximum load capacity in the basket	kg (lbs)	350 (771) **(1)**	240 (529) **(1)**	-
- Maximum number of people in the basket (indoor use/ outdoor use)		3 / 3 **(1)**	2 / 2 **(1)**	-

(1): PIPE SUPPORT attachment or PANEL SUPPORT attachment not installed, 4-ATTACHMENTS for the specific values when an attachment is installed.

647772 (16/09/2020)
260 TJ-XP ST3A S1 / 280 TJ-X ST3A S1

SAFETY COMPONENTS

GUARDRAIL



⚠ IMPORTANT ⚠

Do not attach the guardrail with a clamp, twine or any device that could prevent it from functioning properly.

- Raise the guardrail and keep it raised to get in and out of the basket.

NB: 1 guardrail at the rear of the basket, and 2 other guardrails on each side of the basket.

NB: The platform in the illustration is a 260 TJ-XP ST3A S1.

HARNESS ATTACHMENT POINTS



⚠ IMPORTANT ⚠

Only one operator is permitted to use each attachment point.

- Attach security harnesses to attachment points in the basket.

NB: 4 attachment points, ◁ STICKERS: HARNESS ATTACHMENT POINTS.

NB: The platform in the illustration is a 260 TJ-XP ST3A S1.

TURNTABLE LOCKING PIN

Locking the turntable prevents it from rotating.

Position (1A): The turntable is unlocked.

Position (1B): The turntable is locked.



LOCK THE TURNTABLE

- Align the pin (1) and the chassis (A) notch.
- Pull the pin and turn it to the left.
- Push it into the chassis notch (position (1B)).



UNLOCK THE TURNTABLE

- Pull the pin (1) and turn it to the right.
- Push it into position (1A).

647772 (16/09/2020)
260 TJ-XP ST3A S1 / 280 TJ-X ST3A S1

CONTROL PANEL AND SAFETY DEVICES AT GROUND LEVEL

⚠ IMPORTANT ⚠

The left and right are defined in PLATFORM OPERATION: TRANSPORT/WORKING POSITION.

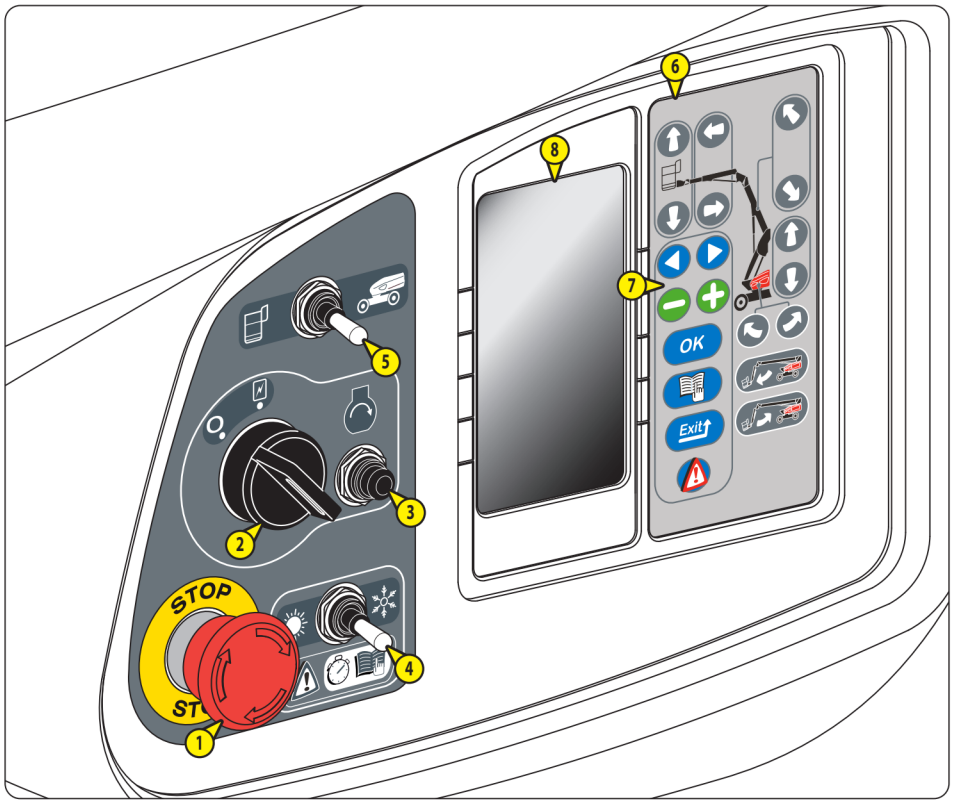







1 - EMERGENCY STOP BUTTON 2-33
2 - IGNITION SWITCH 2-33
3 - ENGINE STARTER BUTTON 2-33
4 - ENGINE STARTING MODE SWITCH 2-34
5 - CONTROL SELECTION SWITCH ON THE GROUND/IN THE BASKET 2-34
6 - CONTROL KEYS 2-34
7 - NAVIGATION SCREEN INTERFACE KEYS 2-35
8 - INTERFACE SCREEN 2-35
9 - BACKUP PUMP BUTTON 2-35
10 - HORN 2-36
11 - ORANGE ROTATING BEACON LIGHT 2-36
12 - FLASHING LIGHT SPS (OPTION) 2-36
13 - TILT SENSOR 2-36

CONTROL PANEL AND SAFETY DEVICES IN THE BASKET

⚠ IMPORTANT ⚠

The front, rear, left and right are defined in PLATFORM OPERATION: TRANSPORT/WORKING POSITION.

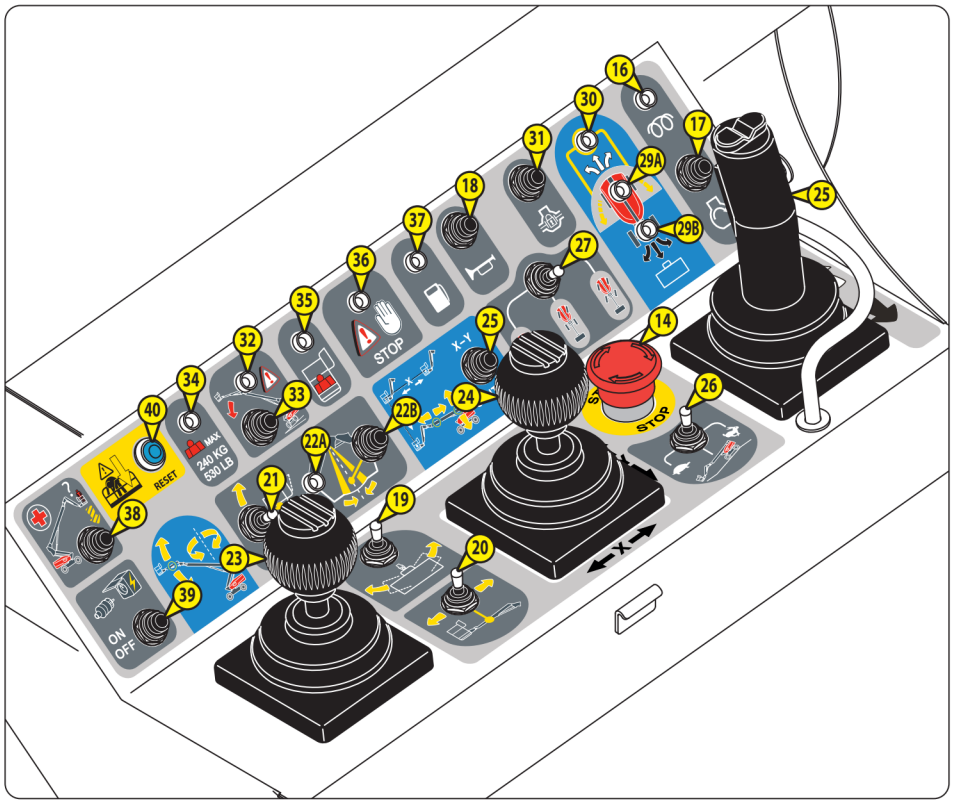

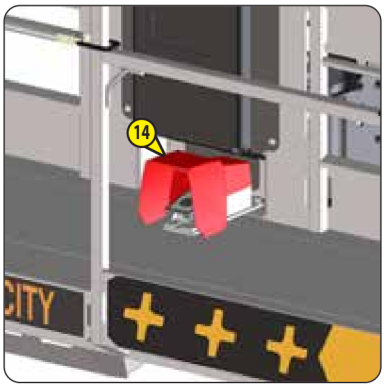



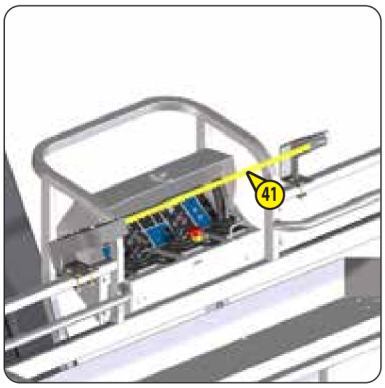

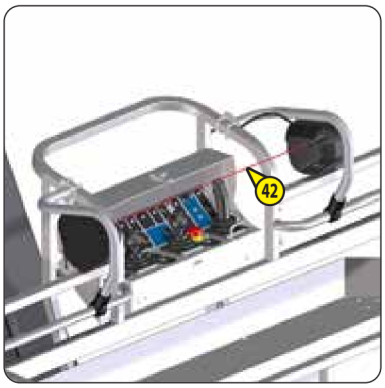

647772 (16/09/2020)
260 TJ-XP ST3A S1 / 280 TJ-X ST3A S1

14 - PEDAL SWITCH 2-37
15 - EMERGENCY STOP BUTTON 2-37
16 - PREHEAT INDICATOR LAMP 2-37
17 - ENGINE STARTER BUTTON 2-37
18 - HORN BUTTON 2-38
19 - BASKET ROTATION SWITCH 2-38
20 - JIB TELESCOPE SWITCH ONLY FOR 280 TJ-X ST3A S1 2-38
21 - BASKET TILT SWITCH ONLY FOR 280 TJ-X ST3A S1 2-38
22 - WARNING LIGHT AND BUTTON - JIB ZERO POSITION 2-39
23 - JIB AND TURNTABLE CONTROL HANDLE 2-39
24 - MAIN ARM AND TELESCOPE CONTROL HANDLE 2-40
25 - X-Y FUNCTION BUTTON 2-40
26 - DRIVING/STEERING CONTROL HANDLE 2-41
27 - DRIVING SPEED SELECTION SWITCH 2-41
28 - STEERING MODE SELECTION SWITCH 2-42
29 - WHEEL ALIGNMENT INDICATOR LIGHTS 2-42
30 - TURNTABLE ORIENTATION MORE THAN 90° INDICATOR LIGHT 2-43
31 - DIFFERENTIAL LOCKING BUTTON 2-43
32 - TILT/OSCILLATION WARNING LIGHT 2-44
33 - USE ON SLOPE BUTTON 2-44
34 - RESTRICTED CAPACITY WARNING LIGHT ONLY FOR 280 TJ-X ST3A S1 2-45
35 - OVERLOAD WARNING LIGHT 2-45
36 - FAULT WARNING LIGHT 2-46
37 - LOW FUEL LEVEL WARNING LIGHT 2-47
38 - BACKUP PUMP BUTTON 2-47
39 - GENERATOR BUTTON (OPTION: GENERATOR) 2-47
40 - RESET BUTTON SPS (OPTION) 2-48
41 - SAFETY STRAP SPS (OPTION) 2-48
42 - SAFETY CABLE SPS (OPTION) 2-48
43 - AUDIBLE ALARM 2-48

REMOTE CONTROL UNIT

The remote control unit (A) is located under the turntable's right-hand cover.



FIRST VERSION

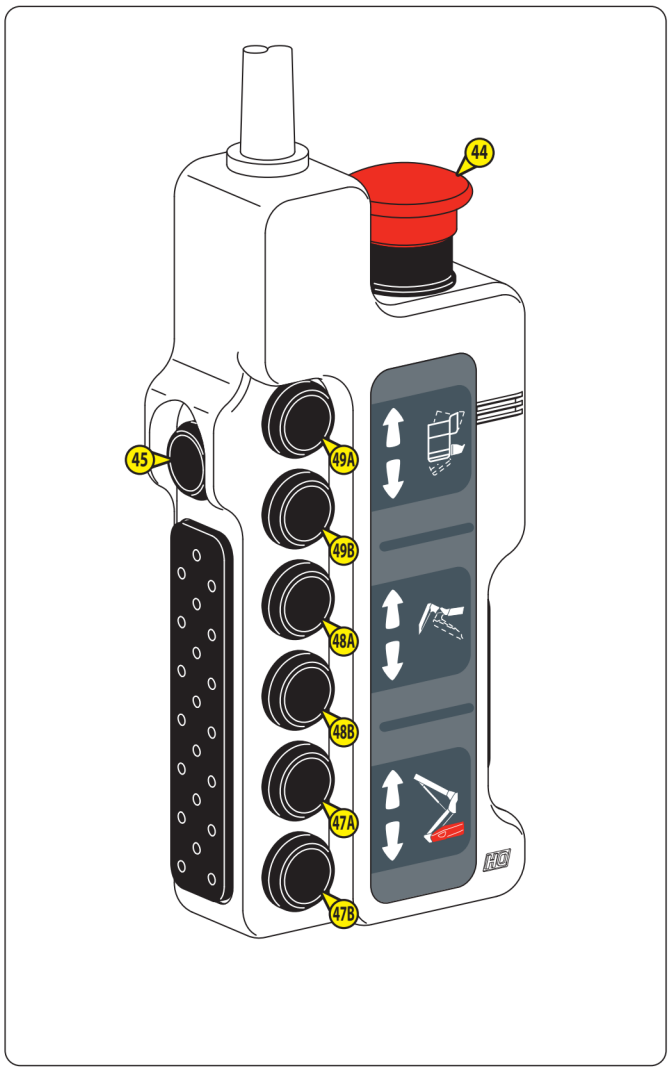

SECOND VERSION

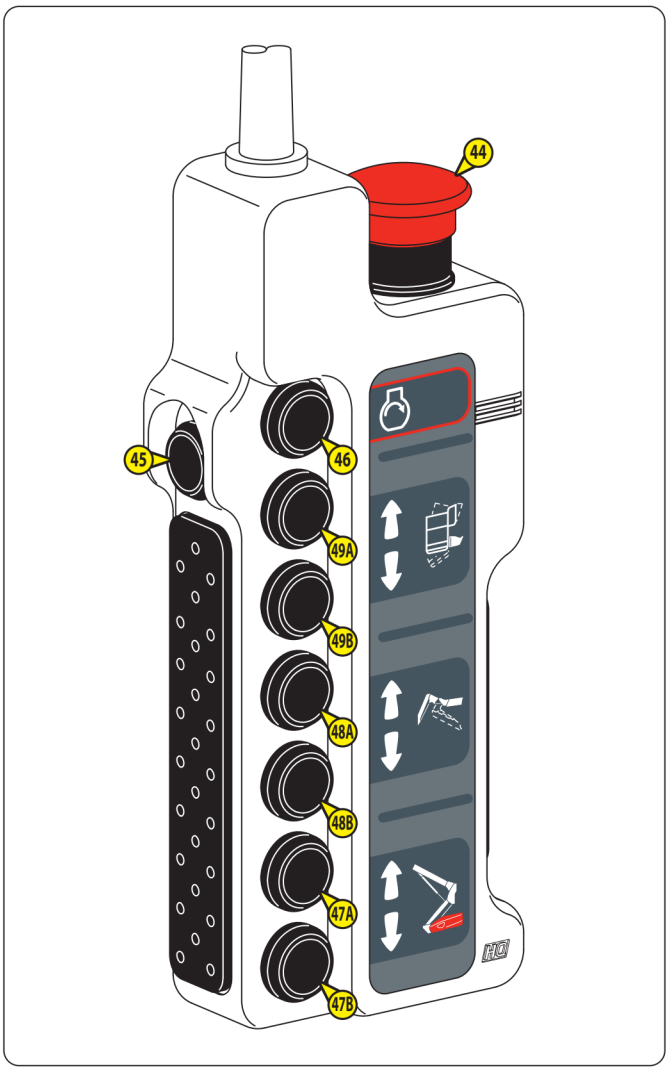

44 - EMERGENCY STOP BUTTON. 2-49
45 - ACTIVATION BUTTON 2-49
46 - ENGINE STARTER BUTTON (depending on version) 2-49
47 - MAIN ARM CONTROL BUTTONS 2-49
48 - BASKET/JIB TILT CONTROL BUTTONS 2-50
49 - BASKET TILT BUTTON ONLY FOR 280 TJ-X ST3A S1 2-50

1 - EMERGENCY STOP BUTTON

⚠ IMPORTANT ⚠

In all cases this control takes priority, even when the movements are executed from the basket control panel or the remote control unit.

Movements may stop suddenly if the emergency stop is activated.

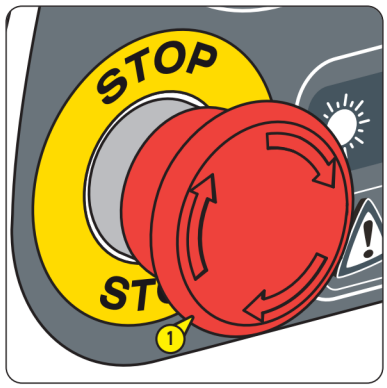

2 positions:

- OFF (locked): Press the button to cut off movement and to stop the engine.
- ON (unlocked): Turn the button a quarter turn to the right and release it.

2 - IGNITION SWITCH

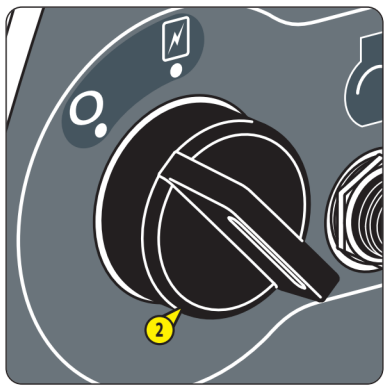

2 positions:

Without battery cut-off option: Powering down of the platform. The key can be removed.

With battery cut-off option: Powering down of the control system. The key can be removed.

NB: The battery cut-off must be in the OFF position to switch the platform off.

Without battery cut-off option: Powering up the platform. The key cannot be removed.

NB: The 3 emergency stop buttons must be in the ON position to power up the platform.

With battery cut-off option: Powering up the control system. The key cannot be removed.

NB: The battery cut-off must be in the ON position and the 3 emergency stop buttons must be in the ON position to power up the platform.

3 - ENGINE STARTER BUTTON

⚠ IMPORTANT ⚠

Do not keep the button pressed for more than 15 seconds.

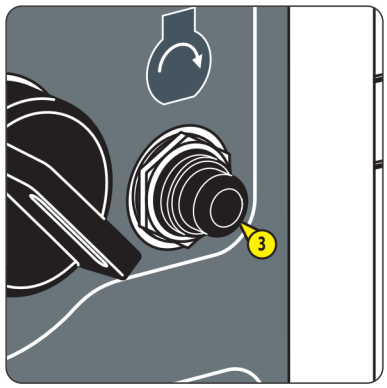

- Press and hold down the button to start the engine.
- Release button once the engine has started.

4 - ENGINE STARTING MODE SWITCH

2 positions:

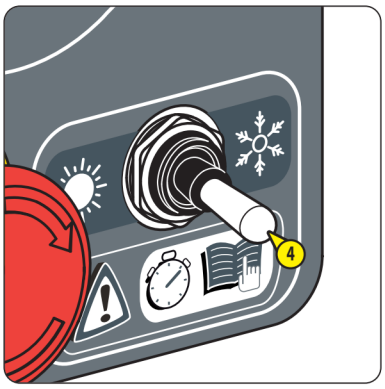

SUN POSITION for an outside temperature higher than -10 °C.

SNOW POSITION for an outside temperature lower than -10 °C:

- Put the switch in SNOW POSITION.
- Switch on the engine.
- Wait for 30 to 60 seconds depending on the outside temperature without using the platform controls.
- Put the switch in SUN POSITION to restore standard idling.

5 - CONTROL SELECTION SWITCH ON THE GROUND/IN THE BASKET

2 positions:



CONTROLS IN THE BASKET when the switch is released:

- The controls in the basket are activated.

GROUND CONTROLS:

- Push and hold the switch to the right to activate the ground level controls.

NB: This operating mode is called the "dead man" function.

6 - CONTROL KEYS

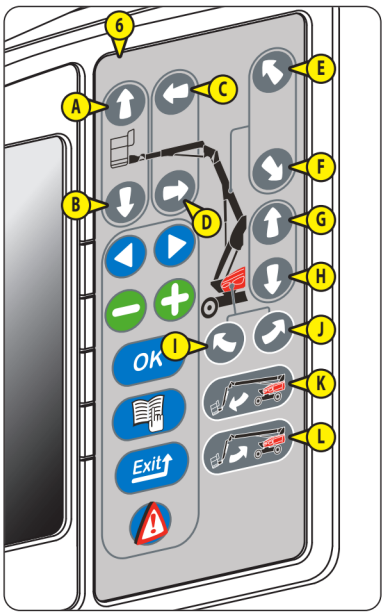

- Push and hold the ground level/basket control selection switch to the right .
- Press and hold down the appropriate keys to activate platform controls:
  - (A) **RAISE THE JIB.**
  - (B) **LOWER THE JIB.**
  - (C) **EXTEND THE JIB TELESCOPE (ONLY FOR 280 TJ-X ST3A S1).**
  - (D) **RETRACT THE JIB TELESCOPE (ONLY FOR 280 TJ-X ST3A S1).**
  - (E) **EXTEND THE TELESCOPE.**
  - (F) **RETRACT THE TELESCOPE.**
  - (G) **RAISE THE MAIN ARM.**
  - (H) **LOWER THE MAIN ARM.**
  - (I) **TURN THE TURNTABLE TO THE LEFT.**
  - (J) **TURN THE TURNTABLE TO THE RIGHT.**
  - (K) **TILT BASKET/JIB UPWARDS.***
  - (L) **TILT BASKET/JIB DOWNWARDS.***

  *: These controls are only active when the angle of the main arm is 15° maximum in relation to the completely lowered position.
- Release the keys or the selection switch to stop.

7 - NAVIGATION SCREEN INTERFACE KEYS

- Press the appropriate keys:



ARROWS:
• Navigate through the menu/sub-menu pages.



PLUS/MINUS:
• Navigate through the menu pages or change the parameters.



OK:
• Confirm a selection or a parameter.



MENU:
• Display the MENU PAGE.
• Exit a men/sub-menu and return to WORK PAGE.



EXIT:
• Cancel a parameter change.
• Return to the previous sub-menu level.



FAULT:
• Display the FAULT CODE/ALARM PAGE.

NB: ◅ SCREEN DISPLAY - DESCRIPTION OF PAGES.

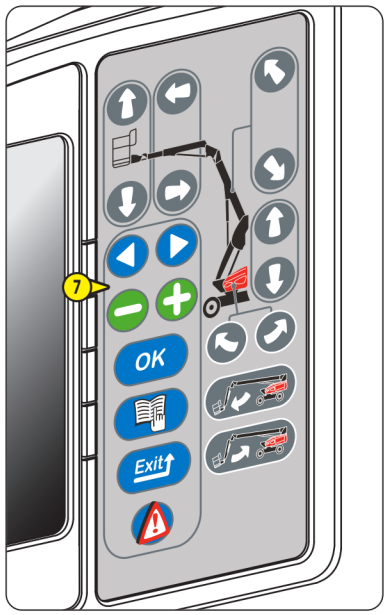

8 - INTERFACE SCREEN

The interface screen displays all the start-up steps and the settings, and gives access to specific sub-menus, such as:

- Platform maintenance.
- Fault log.
- Hour meters (engine operation hours counter, daily usage hour counter, etc.).

NB: ◅ SCREEN DISPLAY - DESCRIPTION OF PAGES.



9 - BACKUP PUMP BUTTON

◅ RESCUE PROCEDURE.



647772 (16/09/2020)
260 TJ-XP ST3A S1 / 280 TJ-X ST3A S1

10 - HORN



The horn sounds:

- When the horn button is pressed.
- Twice when the platform is turned on without starting the engine in the next 10 seconds, ◁ SCREEN DISPLAY - DESCRIPTION OF PAGES: ALARM PAGE.

ALL MOVEMENTS ALARM option: This sounds intermittently when the controls are activated and when driving/steering the platform, ◁ DEFINITION OF SUB-MENUS: USER OPTIONS: HORN MODE.

DRIVING/STEERING ALARM option: This sounds intermittently when driving/steering the platform, ◁ DEFINITION OF SUB-MENUS: USER OPTIONS: HORN MODE.

SECONDARY PROTECTION SYSTEM option SPS - FIRST VERSION: It sounds intermittently when the system is in alarm mode, ◁ OPTIONS.

SECONDARY PROTECTION SYSTEM option SPS - SECOND VERSION: It sounds intermittently when the system is in alarm mode, ◁ OPTIONS.

11 - ORANGE ROTATING BEACON LIGHT



PERMANENT ORANGE ROTATING BEACON LIGHT option deactivated: The orange rotating beacon light is lit when the controls are activated and when driving/steering the platform, ◁ DEFINITION OF SUB-MENUS: USER OPTIONS: PERMANENT ORANGE ROTATING BEACON LIGHT.

PERMANENT ORANGE ROTATING BEACON LIGHT option activated: The orange rotating beacon light is lit when the platform is powered up, ◁ DEFINITION OF SUB-MENUS: USER OPTIONS: PERMANENT ORANGE ROTATING BEACON LIGHT.

12 - FLASHING LIGHT SPS (OPTION)

◁ OPTIONS: SECONDARY PROTECTION SYSTEM SPS - FIRST VERSION or ◁ OPTIONS: SECONDARY PROTECTION SYSTEM SPS SECOND VERSION.

13 - TILT SENSOR



An indicator light on the levelling sensor indicates its status:

	INDICATOR LIGHT	AUDIBLE ALARM
Maximum authorised tilt not reached	Lit	Stop
Maximum authorised tilt reached	Unlit	Sounds intermittently

647772 (16/09/2020)
260 TJ-XP ST3A S1 / 280 TJ-X ST3A S1

14 - PEDAL SWITCH

⚠ IMPORTANT ⚠

Do not press the pedal switch when starting the engine.

- Press and hold down the foot switch to activate the controls from the basket control panel.

NB: This operating mode is called the "dead man" function.

NB: No controls can be activated if the foot switch is released.

NB: The platform in the illustration is a 260 TJ-XP ST3A S1.

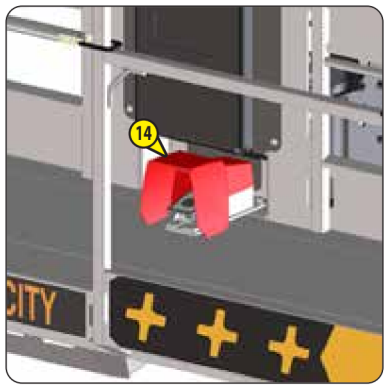

15 - EMERGENCY STOP BUTTON

⚠ IMPORTANT ⚠

In all cases this control takes priority, except when the movements are executed from the ground control panel or the remote control unit.

Movements may stop suddenly if the emergency stop is activated.

2 positions:

- OFF (locked): Press the button to cut off movement and to stop the engine.
- ON (unlocked): Turn the button a quarter turn to the right and release it.

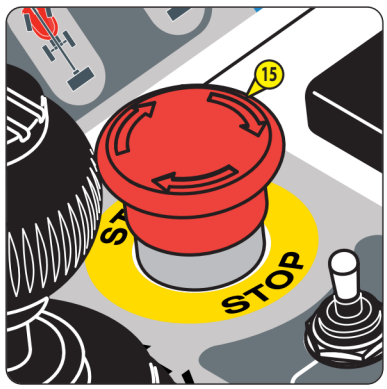

16 - PREHEAT INDICATOR LAMP

The indicator light is lit during the engine preheat cycle.

It switches off when the preheat cycle is completed.

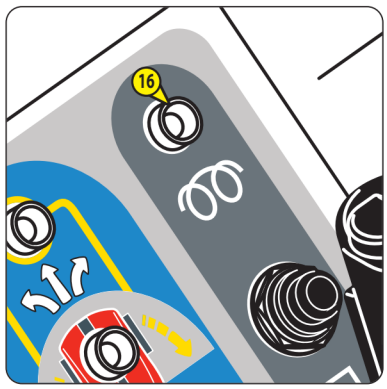

17 - ENGINE STARTER BUTTON

⚠ IMPORTANT ⚠

Do not keep the button pressed for more than 15 seconds.

- Press and hold down the button to start the engine.
- Release button once the engine has started.

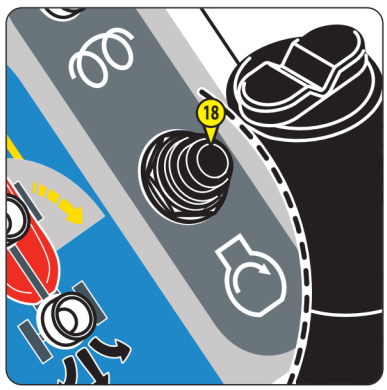

18 - HORN BUTTON

- Press and hold down the button to sound the horn. Release to stop.

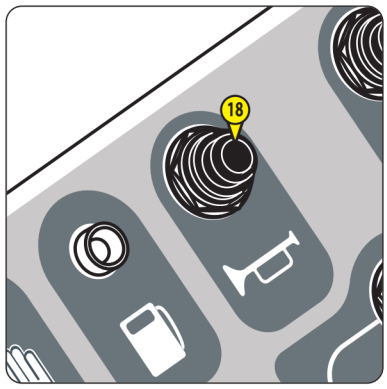

19 - BASKET ROTATION SWITCH

- Press and hold down the foot switch.

TURN BASKET TO THE LEFT

- Push and hold the switch to the left. Release to stop.

TURN BASKET TO THE RIGHT

- Push and hold the switch to the right. Release to stop.

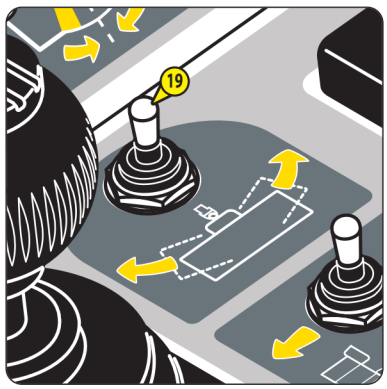

20 - JIB TELESCOPE SWITCH ONLY FOR 280 TJ-X ST3A S1

- Press and hold down the foot switch.

EXTEND THE JIB TELESCOPE

- Push and hold the switch to the left. Release to stop.

RETRACT THE JIB TELESCOPE

- Push and hold the switch to the right. Release to stop.

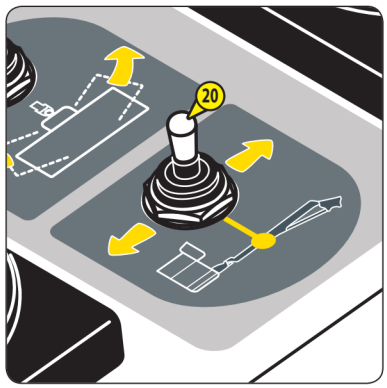

21 - BASKET TILT SWITCH ONLY FOR 280 TJ-X ST3A S1

NB: The controls are locked when the platform is in working position, ◁ PLATFORM OPERATION: TRANSPORT/WORKING POSITION.

- Press and hold down the foot switch.

TILT BASKET UPWARDS

- Push and hold the switch upwards. Release to stop.

TILT BASKET DOWN

- Push and hold the switch downwards. Release to stop.

NB: These controls are only active when the JIB ZERO POSITION WARNING LIGHT is off.



22 - WARNING LIGHT AND BUTTON - JIB ZERO POSITION

⚠ IMPORTANT ⚠

FAULT WARNING LIGHT when the warning light (22A) flashes at the same time as the FAULT WARNING LIGHT.

The basket/jib tilt is given by the position of the gauge (A) in relation to the sticker (B) ◁ STICKER: JIB ANGLE.



WARNING LIGHT (22A)

It is off when the basket/jib tilt is less than 5° (upwards or downwards).

It is on when the basket/jib tilt is greater than 5° and less than 9° (upwards or downwards).
It is necessary to return the basket/jib tilt to zero:

- Press and hold down the foot switch.
- Press and hold down the button (22B).
- Wait until the warning light goes off and then wait till the audible alarm sounds once.
- Release the button.

NB: ◁ STICKERS: JIB ZERO/X-Y/TURNTABLE ORIENTATION (C).

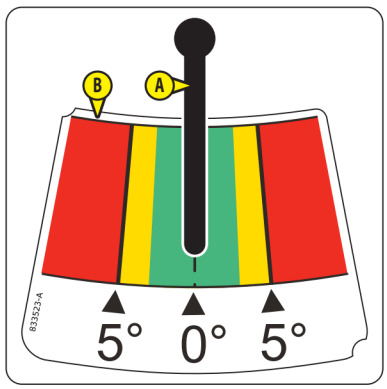

It flashes when the basket/jib tilt is greater than 9° (upwards or downwards):

NB: The audible alarm sounds intermittently and all the controls are locked.

- Alert the person on the ground to activate the emergency controls and get out of the basket.
- If necessary, contact the maintenance personnel to unlock the controls.

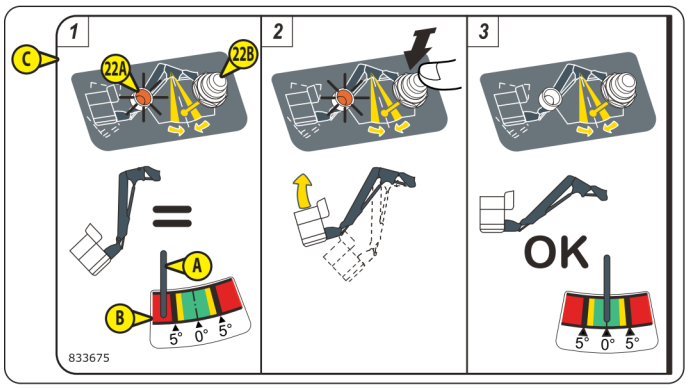

23 - JIB AND TURNTABLE CONTROL HANDLE

- Press and hold down the foot switch.

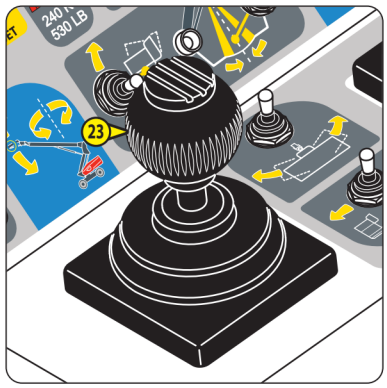

RAISE THE JIB

- Push and hold the control handle forward. Release to stop.

LOWER THE JIB

- Pull and hold the control handle back. Release to stop.

TURN THE TURNTABLE TO THE LEFT

- Push and hold the control handle to the left. Release to stop.

TURN THE TURNTABLE TO THE RIGHT

- Push and hold the control handle to the right. Release to stop.

NB: The proportional control handle must be operated smoothly, without jerking.

24 - MAIN ARM AND TELESCOPE CONTROL HANDLE

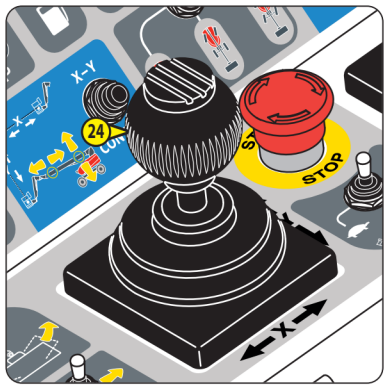

- Press and hold down the foot switch.

RAISE THE MAIN ARM

- Push and hold the control handle forward. Release to stop.

LOWER THE MAIN ARM

- Pull and hold the control handle back. Release to stop.

EXTEND THE TELESCOPE

- Push and hold the control handle to the left. Release to stop.

RETRACT THE TELESCOPE

- Push and hold the control handle to the right. Release to stop.

NB: The proportional control handle must be operated smoothly, without jerking.

25 - X-Y FUNCTION BUTTON

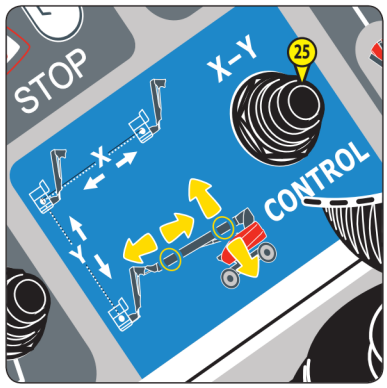

- Press and hold down the foot switch.
- Press and hold down button .

NB: The audible alarm sounds intermittently when the button is pressed.

X FUNCTION

To keep a constant distance between the basket and a ceiling when extending or retracting the telescope.

- Push and hold down the control handle (24) to the left or right. Release to stop.
- Release the button.

NB: STICKERS: JIB ZERO/X-Y/TURNTABLE ORIENTATION (A).

FUNCTION Y

To keep a constant distance between the basket and a wall when raising or lowering the main arm.

- Push and hold down the control handle (24) upwards or downwards. Release to stop.
- Release the button.

NB: STICKERS: JIB ZERO/X-Y/TURNTABLE ORIENTATION (A).

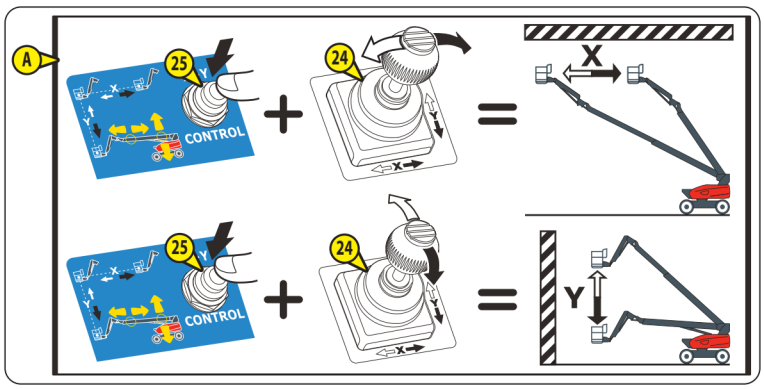

647772 (16/09/2020)
260 TJ-XP ST3A S1 / 280 TJ-X ST3A S1

26 - DRIVING/STEERING CONTROL HANDLE

⚠ IMPORTANT ⚠

Always refer to the arrow colours on the chassis and on the control panel in the basket before driving/steering the platform.

- Press and hold down the foot switch. Press and hold down the (A) trigger.

NB: The driving/steering controls cannot be activated if the trigger and/or the pedal switch are released.

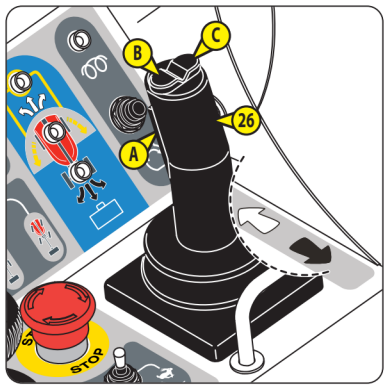

DRIVE FORWARDS

- Push and hold the control handle forward. Release to brake.

DRIVE BACKWARDS

- Pull and hold the control handle back. Release to brake.

NB: The proportional control handle must be operated smoothly, without jerking.

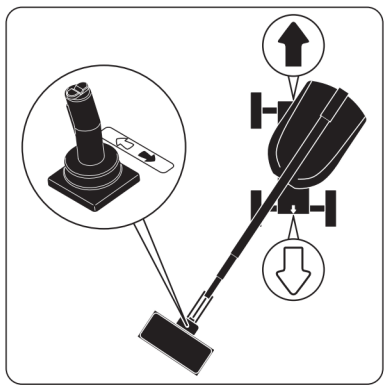

BRAKE

- Release the control handle in the neutral position to apply the brakes.

NB: The brakes are also actioned when the trigger and/or the pedal switch are released.

STEER TO THE LEFT

- Press and hold down the button (B). Release to stop.

STEER TO THE RIGHT

- Press and hold down the button (C). Release to stop.

27 - DRIVING SPEED SELECTION SWITCH

⚠ IMPORTANT ⚠

Always brake the platform before selecting the driving speed.

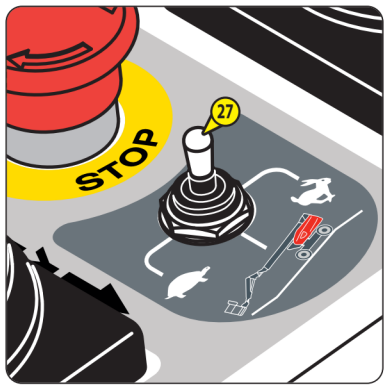

3 positions:

 TORTOISE speed for driving the platform at slow speed.

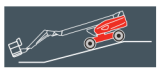 RAMP speed for driving the platform at slow speed with full power.

 HARE speed for driving the platform at high speed.

NB: Driving speed selection only works in the transport position, ◁ PLATFORM OPERATION: TRANSPORT/WORKING POSITION.

NB: Depending on conditions, restrictions may apply to the speed activated, ◁ PLATFORM OPERATION: TRANSPORT/WORKING POSITION.

28 - STEERING MODE SELECTION SWITCH



⚠ IMPORTANT ⚠

Always brake the platform before changing steering mode.
The front and rear wheels must be correctly aligned with the platform axis before changing the steering mode,
◁ WHEEL ALIGNMENT INDICATOR LIGHT. If the wheels are not correctly aligned:
- Select the 4-WHEEL DRIVE steering mode and align the rear wheels.
- Select the 2-WHEEL DRIVE steering mode and align the front wheels.

3 positions:

 4-WHEEL DRIVE steering mode: Front and rear steering wheels in opposite directions.

 2-WHEEL DRIVE steering mode: Front steering wheels.

 CRAB steering mode: Front and rear steering wheels in the same direction.

NB: Depending on conditions, restrictions may apply to the speed activated,
◁ PLATFORM OPERATION: TRANSPORT/WORKING POSITION.

29 - WHEEL ALIGNMENT INDICATOR LIGHTS



The Indicator light (29A) comes on when the front wheels are correctly aligned with the platform axis.

The indicator light (29B) is on when the rear wheels are correctly aligned with the platform axis.

647772 (16/09/2020)
260 TJ-XP ST3A S1 / 280 TJ-X ST3A S1

30 - TURNTABLE ORIENTATION MORE THAN 90° INDICATOR LIGHT

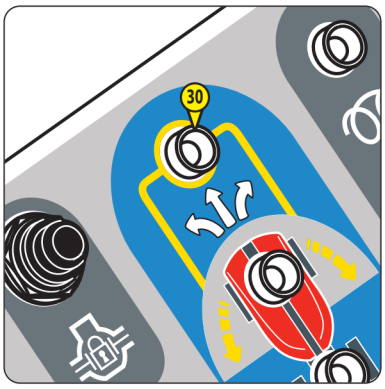

⚠ IMPORTANT ⚠

Always refer to the arrow colours on the chassis and on the control panel in the basket before driving/steering the platform.

The indicator light is off when the turntable angle is less than 90° (to left or right) in relation to the neutral position. The direction of travel is that indicated in the illustrations (A1) and (A2).

The indicator light is on when the turntable angle is greater than 90° (to left or right) in relation to the neutral position (grey area (C)). The direction of travel is that indicated in the illustrations (B1) and (B2).

NB: ◁ STICKERS: JIB ZERO/X-Y/TURNTABLE ORIENTATION (D).

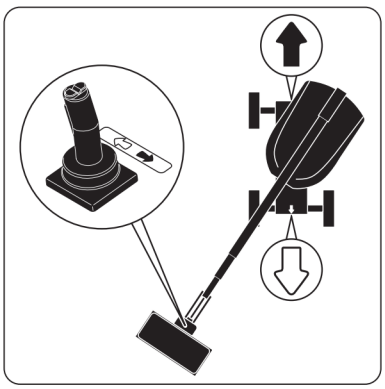

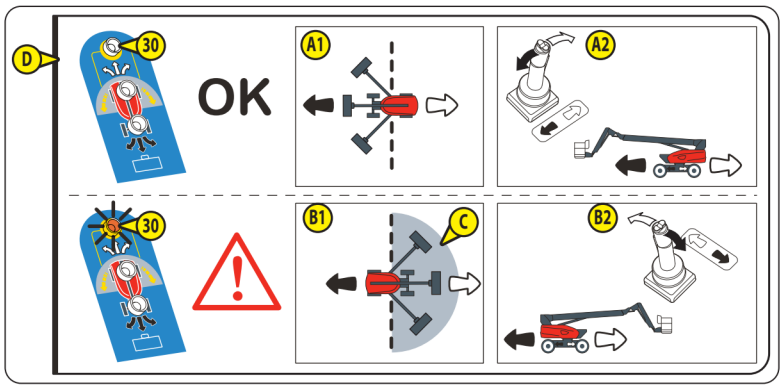

31 - DIFFERENTIAL LOCKING BUTTON



⚠ IMPORTANT ⚠

It is recommended that differential locking is only activated/deactivated when the wheels are correctly aligned with the platform axis.

- Press and hold down the button, then drive the platform (or vice versa) to activate the differential lock.
- Release the button, then brake the platform (or vice versa) to deactivate the differential lock.

32 - TILT/OSCILLATION WARNING LIGHT



The tilt alarm is activated when the platform is on a steep slope:

- The indicator light flashes (On = 0.6 seconds, Off = 0.4 seconds) and the audible alarm sounds intermittently (On = 1 seconds, Off = 1 seconds).
- Some controls are locked, ◁ PLATFORM OPERATION: LOCKED CONTROLS.

To stop the tilt alarm and unlock the controls:

- Fully retract the telescope.
- Retract the jib telescope completely (only for 280 TJ-X ST3A S1).
- Fully lower the main arm.
- Move platform to a level surface.

The oscillation alarm is activated when an oscillating axle locking fault is detected:

⚠ IMPORTANT ⚠

If the fault persists, contact your dealer.

- The indicator light flashes (On = 0.4 seconds, Off = 0.2 seconds) and the audible alarm sounds intermittently (On = 0.4 seconds, Off = 0.4 seconds).
- Some controls are locked, ◁ PLATFORM OPERATION: LOCKED CONTROLS.

To stop the oscillation alarm and unlock the controls:

- Fully retract the telescope.
- Retract the jib telescope completely (only for 280 TJ-X ST3A S1).
- Fully lower the main arm.
- Fully lower the jib.
- Move platform to a level surface.
- Press the key OK (OK) on the ground control panel so that the oscillation alarm is no longer displayed. This action is recorded in the faults history.

33 - USE ON SLOPE BUTTON



⚠ IMPORTANT ⚠

The platform could tip over when this function is used. Use with extreme caution.

- Press the button and hold it down to action the locked controls (except driving forward and backwards) when the tilt alarm is activated. ◁ TILT/OSCILLATION WARNING LIGHT.

647772 (16/09/2020)
260 TJ-XP ST3A S1 / 280 TJ-X ST3A S1

34 - RESTRICTED CAPACITY WARNING LIGHT ONLY FOR 280 TJ-X ST3A S1

The warning light status depends on the zone where the basket and the load in the basket are.



	LOAD IN THE BASKET	RESTRICTED CAPACITY WARNING LIGHT	
ZONE A (CAPACITY WITH RESTRICTIONS)	Less than 240 kg (529 lbs.)	Unlit	It is possible to reach ZONE B.
	More than 240 kg (529 lbs.)	Lit	It is not possible to reach ZONE B: The descent of the main arm is locked or the telescopic boom extension is locked.
ZONE B (CAPACITY WITHOUT RESTRICTIONS)	Less than 240 kg (529 lbs.)	Flashes	The load in the basket is limited to 240 kg (529 lbs).
	More than 240 kg (529 lbs.)	Lit	The load in the basket has reached maximum capacity in this zone. The OVERLOAD WARNING LIGHT flashes and the audible alarm sounds continuously.

NB: ◁ DIMENSIONS AND DIAGRAM 280 TJ-X ST3A S1 for definition of the zones.

35 - OVERLOAD WARNING LIGHT

The overload alarm is activated when the load in the basket has reached maximum capacity:

- The light flashes and the audible warning sounds continuously.
- All controls are locked, ◁ PLATFORM OPERATION: LOCKED CONTROLS.

To stop the overload alarm and unlock the controls:

• Remove excessive load.



36 - FAULT WARNING LIGHT



⚠ IMPORTANT ⚠

Refer to the maintenance personnel if there is a fault.

The indicator light flashes when a fault is detected:

- Minor fault: on = 0.4 seconds, off = 0.8 seconds.
- Major fault: on = 0.4 seconds, off = 0.2 seconds.

MINOR FAULTS	AUDIBLE ALARM	
The pedal switch or control selection switch on the ground/ in the basket is blocked	1 beep	Stop using the platform.
The remote control unit activation button is locked		
The driving/steering control handle trigger is locked		
The pressure-sensitive bar SPS, the safety cable SPS or the reset button SPS is blocked (OPTION)	3 beeps repeated every 8 seconds	
Other minor faults	Stop	

MAJOR FAULTS	AUDIBLE ALARM	
CAN Communication	Stop	All the controls are locked
Low engine oil pressure	Sounds intermittently	Stop the engine immediately. NB: The engine stops after 90 seconds.
High coolant temperature		
Engine overspeed	Stop	The engine stops after 2 seconds.
Hydrostatic pump	Stop	The driving functions are locked.
Telescope cable slack or cut (CABLE BREAKAGE ALARM)	Sounds intermittently	Some controls are locked. ◁ PLATFORM OPERATION: LOCKED CONTROLS.
Proportional distributor	Sounds intermittently	Stop using the platform.
Overload sensor inconsistency		
Oscillation alarm (1)		
Engine oil pressure sensor		
Arm angle sensor	Sounds intermittently	The simultaneous functions are locked. The movement speeds are reduced.
Arm angle sensor inconsistency		
Basket/jib tilt angle sensor (2)		
Inconsistency of the basket/jib tilt angle sensors (2)		
Telescope sensor inconsistency	Stop	
Fuel level very low (level 3)	◁ LOW FUEL LEVEL WARNING LIGHT	

(1): The TILT/OSCILLATION WARNING LIGHT flashes at the same time.

(2): The JIB ZERO POSITION INDICATOR LIGHT flashes at the same time.

647772 (16/09/2020)
260 TJ-XP ST3A S1 / 280 TJ-X ST3A S1

37 - LOW FUEL LEVEL WARNING LIGHT

The light flashes and the audible alarm sounds when the fuel level is low.



3 alarm levels:

	LOW FUEL LEVEL WARNING LIGHT	AUDIBLE ALARM
Level 1	On = 0.8 seconds Off = 0.4 seconds	3 beeps (ON = 0.6 seconds, OFF = 0.4 seconds) repeated every 10 minutes
Level 2	On = 0.4 seconds Off = 0.4 seconds	3 beeps (ON = 0.4 seconds, OFF = 0.4 seconds) repeated every minute
Level 3*	On = 0.3 seconds Off = 0.2 seconds	3 beeps (ON = 0.4 seconds, OFF = 0.4 seconds) repeated every 10 seconds

*: It is no longer possible to raise the main arm, extend the telescope, raise the jib, tilt the basket/jib upwards/downwards, extend the jib telescope (280 TJ-X ST3A S1), tilt the basket up or down (280 TJ-X ST3A S1), turn the turntable and turn the basket for more than 5 seconds at a time.

38 - BACKUP PUMP BUTTON

◁ RESCUE PROCEDURE.



39 - GENERATOR BUTTON (OPTION: GENERATOR)

◁ OPTIONS: GENERATOR.

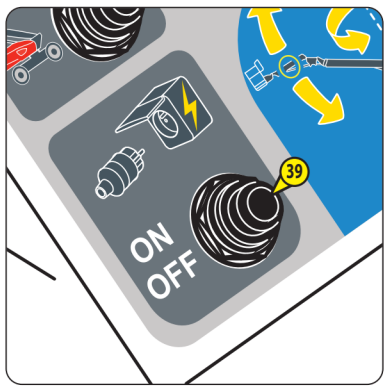

647772 (16/09/2020)
260 TJ-XP ST3A S1 / 280 TJ-X ST3A S1

40 - RESET BUTTON SPS (OPTION)

◅ OPTIONS: SECONDARY PROTECTION SYSTEM SPS - FIRST VERSION or ◅ OPTIONS: SECONDARY PROTECTION SYSTEM SPS - SECOND VERSION.



41 - SAFETY STRAP SPS (OPTION)

◅ OPTIONS: SECONDARY PROTECTION SYSTEM SPS - SECOND VERSION.



42 - SAFETY CABLE SPS (OPTION)

◅ OPTIONS: SECONDARY PROTECTION SYSTEM SPS - THIRD VERSION.



43 - AUDIBLE ALARM

The audible alarm sounds:

- Once after the platform has been powered up.
- Intermittently when the basket/jib tilt is greater than 9°, ◅ WARNING LIGHT AND BUTTON - JIB ZERO POSITION.
- Intermittently when the X-Y function button is pressed, refer to X-Y FUNCTION BUTTON.
- TILT ALARM: Intermittently when the platform is on a steep slope, ◅TILT/OSCILLATION WARNING LIGHT.
- OSCILLATION ALARM: Intermittently when a locking fault in the oscillating axle is detected, ◅ TILT/OSCILLATION WARNING LIGHT.
- OVERLOAD ALARM: Continuously when the basket load has reached maximum capacity, ◅ OVERLOAD WARNING LIGHT.
- When a fault is detected, ◅ FAULT WARNING LIGHT.
- When the fuel level is low, ◅ LOW FUEL LEVEL WARNING LIGHT.
- Twice when the controls cannot be operated simultaneously, ◅ PLATFORM OPERATION: SIMULTANEOUS CONTROLS.



44 - EMERGENCY STOP BUTTON

⚠ IMPORTANT ⚠

In all cases this control takes priority, except when the movements are executed from the ground control panel. Movements may stop suddenly if the emergency stop is activated.

2 positions:

- OFF position (locked): Press the button to cut off movement and to stop the engine.
- ON position (unlocked):
  - First version: Turn the button a quarter turn to the right and release it.
  - Second version: Pull the button or turn it a quarter turn to the right and release it.

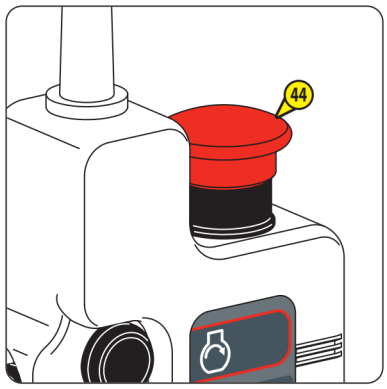

45 - ACTIVATION BUTTON

- Press and hold down the foot switch to activate the controls from the remote control unit.

NB: This operating mode is called the "dead man" function.

NB: No controls can be activated if the button is released.

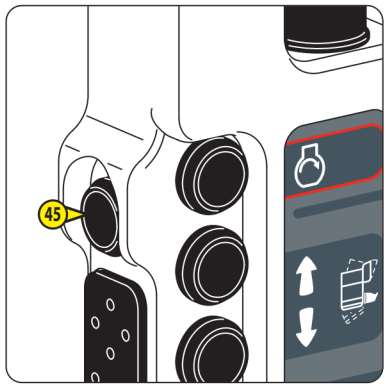

46 - ENGINE STARTER BUTTON (depending on version)

⚠ IMPORTANT ⚠

Do not keep the button pressed for more than 15 seconds.

- Press and hold down the activation button.
- Press and hold down the engine start button to start the engine.
- Release engine start button once the engine has started.
- Release activation button.

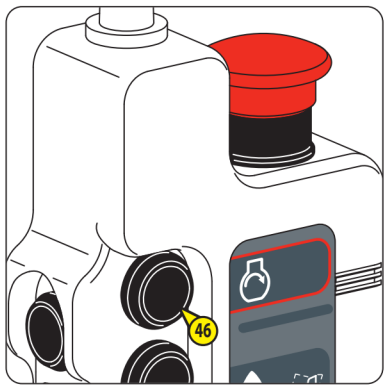

47 - MAIN ARM CONTROL BUTTONS

- Press and hold down the activation button.

RAISE THE MAIN ARM

- Press and hold down the button (47A). Release to stop.

LOWER THE MAIN ARM

- Press and hold down the button (47B). Release to stop.

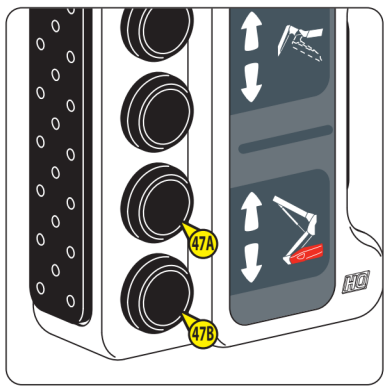

647772 (16/09/2020)
260 TJ-XP ST3A S1 / 280 TJ-X ST3A S1

48 - BASKET/JIB TILT CONTROL BUTTONS

- Press and hold down the activation button.

TILT BASKET/JIB UP

- Press and hold down the button (48A). Release to stop.

TILT BASKET/JIB DOWN

- Press and hold down the button (48B). Release to stop.

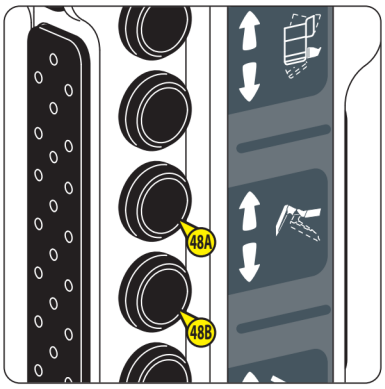

49 - BASKET TILT BUTTON ONLY FOR 280 TJ-X ST3A S1

- Press and hold down the activation button.

TILT BASKET UPWARDS

- Press and hold down the button (49A). Release to stop.

TILT BASKET DOWN

- Press and hold down the button (49B). Release to stop.

NB: These controls are only active when the basket/jib tilt is less than 5° (upwards or downwards), refer to the position of the gauge (A) in relation to the sticker (B) ◁ STICKER: JIB ANGLE.

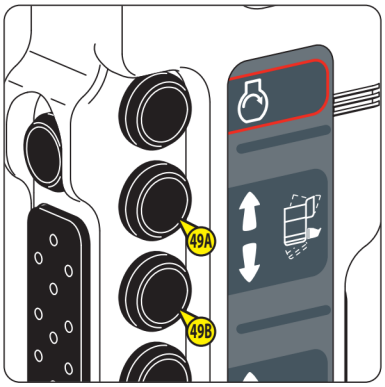

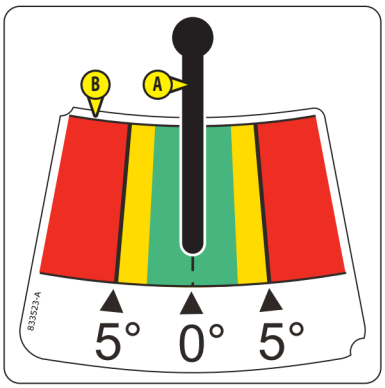

SCREEN DISPLAY - DESCRIPTION OF PAGES

START-UP PAGE

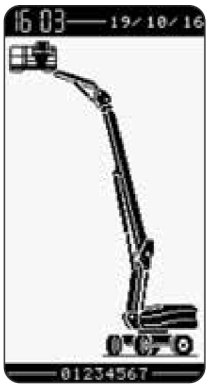

Once the platform is powered up, the start-up page is displayed briefly, then the PREHEAT PAGE is displayed.

NB: The current date and time is displayed at the top of each page. The platform serial number is displayed at the bottom of each page.

PREHEAT PAGE

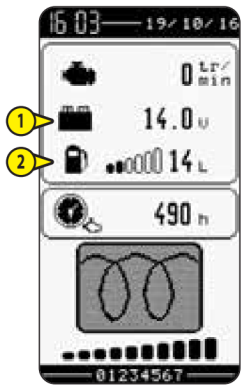

The preheat page is displayed during the engine preheat cycle. The bar graph increases in proportion to the preheat cycle time that has elapsed.

The preheat cycle is completed when the bar graph is full.

A search for faults/alarms is carried out automatically:

- If no fault is detected and no alarm is triggered:
  - The ENGINE STARTING PAGE is displayed.
  - The audible alarm sounds once.
- If a fault is detected: A FAULT PAGE is displayed.
- If an alarm is triggered: An ALARM PAGE is displayed.

NB: The battery voltage (1) and the fuel level (2) are displayed on the PREHEAT PAGE, the ENGINE STARTING PAGE, the WORK PAGE and the FAULT PAGE.

ENGINE START PAGE



The engine can be started when OK is displayed.

To access the menu page, refer to MENU PAGE.

The WORK PAGE is displayed when the engine is started.

MENU PAGE

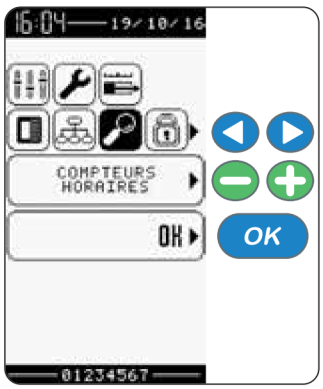

- Press the MENU key to display the MENU PAGE.
- Select a menu by pressing the ARROW keys and confirm by pressing the key OK (OK).
- Select a sub-menu (if necessary) by pressing the MINUS/PLUS keys and confirm by pressing the key OK (OK).
- Return to the WORK PAGE by pressing the MENU key.

NB: ◁ DEFINITION OF SUB-MENUS.

647772 (16/09/2020)
260 TJ-XP ST3A S1 / 280 TJ-X ST3A S1

EDITING A SUB-MENU

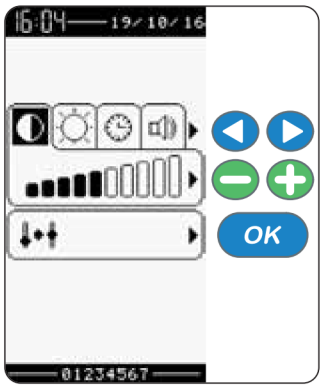

- After selecting a menu, select the required sub-menu (if necessary) using the ARROW keys ◀ ▶.
- Press the MINUS/PLUS keys ⊖ ⊕ to change the settings.
- Confirm by pressing the key OK OK. A confirmation message appears.
- Press the key OK OK again to confirm.
- Return to previous page by pressing the key EXIT Exit.
- Return to the MENU PAGE by pressing the MENU key.

NB: ◅ DEFINITION OF SUB-MENUS.

WORK PAGE

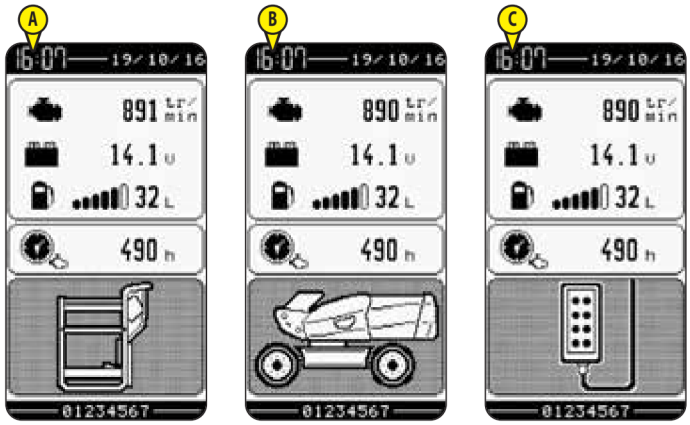

The WORK PAGE (A) is displayed by default, and the basket controls are activated.

The WORK PAGE (B) is displayed when the ground controls are activated.

NB: ◅ CONTROL PANEL AND SAFETY DEVICES ON THE GROUND.

The WORK PAGE (C) is displayed when the remote controls are activated.

NB: ◅ REMOTE CONTROL UNIT.

⚠ IMPORTANT ⚠

A maintenance operation could be necessary when the maintenance alert (1 spanner) is displayed.
Refer to the maintenance personnel.

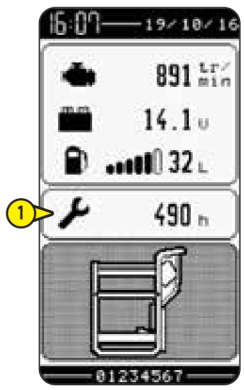

FAULT PAGE

⚠ IMPORTANT ⚠

Certain controls may be locked depending on the fault.
Refer to the maintenance personnel if there is a fault.

A FAULT PAGE is displayed when a fault is detected.

- Press the FAULT key ⚠ to display the FAULT CODE/ALARM PAGE.

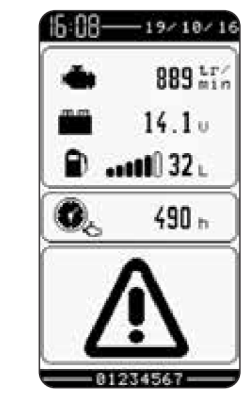

647772 (16/09/2020)
260 TJ-XP ST3A S1 / 280 TJ-X ST3A S1

ALARM PAGE

An ALARM PAGE is displayed intermittently with the FAULT PAGE or the WORK PAGE when an alarm is triggered.

- Resolve the problem to return to the WORK PAGE.

NB: Depending on the type of alarm press the FAULT key to display the FAULT CODE/ALARM PAGE.

NB: The illustrations show 2 examples of alarms.

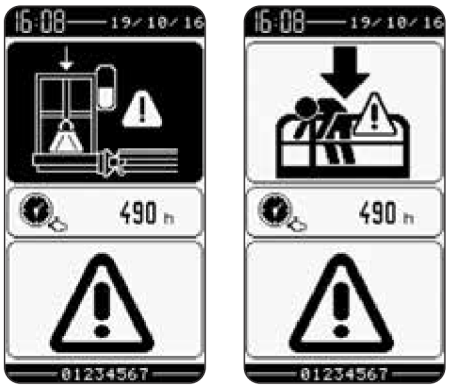

This ALARM PAGE is displayed when the platform is powered up without starting the engine in the next 10 seconds.



To cancel this alarm page:

- Turn the ignition switch to position .
- Turn the ignition switch to position .
- Wait for the preheat cycle to finish and start up the engine.

FAULT/ALARM CODE PAGE

The fault/alarm code and its description are displayed on this page.

- Press the key OK OK so that the fault or alarm is no longer displayed. This action is recorded in the faults history.

NB: The illustration shows an example of a fault code.

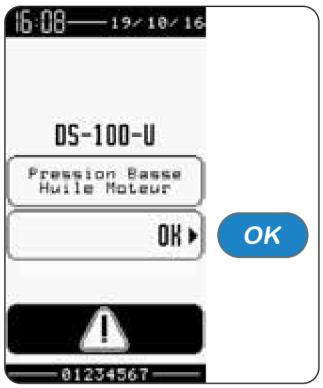

DEFINITION OF SUB-MENUS

	Menus/sub-menus		User		Dealers/Rental companies	
			Access code not required		Access code required	
			Display	Adjustment of parameters	Display	Adjustment of parameters
	"Code" Code			⊙		⊙
	"Options" Options	"Klaxon mode" Horn mode (1)		⊙		⊙
		"Always flash. light" Permanent rotating beacon light (2)		⊙		⊙
		"Generator options" Generator options				⊙
		"Drive in working mode" Travel when working				⊙
		"Tilt in working mode" Working tilt (*)				⊙
		"Auto straight wheel" Wheel realignment				⊙
		"Safe Man System" (*) or "Sec. Guarding System" Secondary protection system (*)				⊙
		"Auto retract tel. (SMS)" Automatic telescope retraction (SMS) (3)				⊙
		"Reduce speed fast + bkwd" Reversing speed + hare reduction				⊙
		"Easy manager" (*) or "Easy Link remote ctrl" Easy Link remote control (*)				⊙
		"Box config Easy manager" Box configuration Easy manager (*) or "Easy Link keypad ctrl" Easy Link keypad control (*)				⊙
	"Language" Language	English				⊙
		Deustch				⊙
		Nederlands				⊙
		Français				⊙
	"System parameters" System parameters	"Engine management" Engine management				⊙
		"Arm management" Arm management				⊙
		"Arm bumper" Arm stop				⊙
		"Telescop management" Telescope management				⊙
		"Telescop bumper" Telescope stop				⊙
		"Jib management" Jib management				⊙
		"Turret management" Turntable management				⊙
		"Bskt levell mgmt" Basket tilt management				⊙
		"Bskt rotation mgmt" Basket rotation management				⊙
		"Jib trim" Jib attitude				⊙
		"X-Y Control" X-Y Control				⊙
		"Jib tilting mgmt" Jib tilt management				⊙
		"Jib tel mgmt" Jib telescope management				⊙
		"Jib tel bumper" Jib telescope stop				⊙
		"Steering management" Steering management				⊙
		"Generator" Generator				⊙
		"Maint periods" Maintenance periods				⊙
		"USB download" Transfer USB				⊙

(*): Depending on version.

(1): "NONE" = NONE, "AVCT" = DRIVING/STEERING ALARM, "MVT" = ALL MOVEMENTS ALARM.

(2): PERMANENT ORANGE ROTATING BEACON LIGHT: "OFF" = deactivated, "ON" = activated.

(3): Depending on version, AUTOMATIC TELESCOPE RETRACTION: "OFF" = deactivated, "ON" = activated.

NB: The texts in inverted commas are displayed when the language "English" (English) is selected.

	Menus/sub-menus		User		Dealers/Rental companies	
			Access code not required		Access code required	
			Display	Adjustment of parameters	Display	Adjustment of parameters
	"Maintenance" Maintenance	"Oil change" Oil change (4)	⊙			⊙
		"Oil filter" Oil filter (4)	⊙			⊙
		"Air filter" Air filter (4)	⊙			⊙
		"Fuel filter" Diesel filter (4)	⊙			⊙
		"Hydraulic filter" Hydraulic filter (4)	⊙			⊙
		"Hydrostat filter" Hydrostatic filter (4)	⊙			⊙
		"Lubrication" Lubrication (4)	⊙			⊙
		"Mechanical check" Mechanics inspection (4)	⊙			⊙
	"Maintenance History" Maintenance history				⊙	
	"Speed calibration" Speed calibration	"Arm lifting up" Arm raising				⊙
		"Arm lifting down" Arm lowering				⊙
		"Extend telescop" Telescope extension				⊙
		"Retract telescop" Telescope retraction				⊙
		"Jib lifting up" Jib raising				⊙
		"Jib lifting down" Jib lowering				⊙
		"Right rotating turret" Right turntable rotation				⊙
		"Left rotating turret" Left turntable rotation				⊙
		"Basket right rotation" Right basket rotation				⊙
		"Basket left rotation" Left basket rotation				⊙
		"Forward drive working mode" Work forward travel			⊙	
		"Backward drive working mode" Work reverse travel			⊙	
	"Telescop calibration" Telescope calibration	"Extend setting measurement" Extension measurement adjustment				⊙
		"Retract setting measurement" Retraction measurement adjustment				⊙
	"400 kg Overload calibration" 400 kg overload calibration (5)					⊙
	"240 kg Overload calibration" 240 kg overload calibration (6)					⊙
	"350 kg Overload calibration" 350 kg overload calibration (6)					⊙
	"Arm angle calibration" Arm angle calibration					⊙
	"Jib tilting calibration" Jib tilt calibration					⊙
	"Jib compens calibration" Jib compensation calibration					⊙
	"Generator calibration" Generator calibration					⊙
	"Pressure setting" Pressure settings					⊙
	"Cycle running in" Running-in cycle	"Arm" Arm				⊙
		"Telescop" Telescope				⊙
	"Parameters setting" Settings management	"Mach parameters restoration" Restore machine parameters				⊙
		"Mach parameters saving" Save machine parameters				⊙
		"Raw factory prm restoration" Restore basic factory values				⊙
	"Engine accel calibration" Engine acceleration calibration					⊙
	"Joysticks calibration" Joystick calibration					⊙

(4): "at / to do in / urgent" = in / to do / urgent.

(5): Only for 260 TJ-XP ST3A S1.

(6): Only for 280 TJ-X ST3A S1.

NB: The texts in inverted commas are displayed when the language "English" (English) is selected.

	Menus/sub-menus		User		Dealers/Rental companies	
			Access code not required		Access code required	
			Display	Adjustment of parameters	Display	Adjustment of parameters
	"Screen settings" Screen adjustments	"Contrast" Contrast		⊙		⊙
		"Brightness" Brightness		⊙		⊙
		"Date and time" Date and time		⊙		⊙
		"Button tones" Key beeps		⊙		⊙
	"Codification" Codification		⊙		⊙	
	"Machine selection" Machine selection					⊙
	"Hour counters" Hour counter	"Rental" Rental	⊙			⊙
		"Engine" Engine	⊙		⊙	
	"Day hours" Daily hours		⊙		⊙	
	"Input/output visualisation" Input/ output display	"General" General	⊙		⊙	
		"Power supply" Power supplies	⊙		⊙	
		INTOR UPC30	⊙		⊙	
		INANA UPC30	⊙		⊙	
		HSCE UPC30	⊙		⊙	
		OUTTOR UPC30	⊙		⊙	
		OUTLED UPC110	⊙		⊙	
		OUTANA UPC30	⊙		⊙	
		OUTPWM UPC30	⊙		⊙	
	"Diagnostic" Diagnostics	"Lifting arm" Arm raising	⊙		⊙	
		"Lowering arm" Arm lowering	⊙		⊙	
		"Telescop extend" Telescope extension	⊙		⊙	
		"Telescop retract" Telescope retraction	⊙		⊙	
		"Lifting jib" Jib raising	⊙		⊙	
		"Lowering jib" Jib lowering	⊙		⊙	
		"Turret rotation" Turntable rotation	⊙		⊙	
		"Lifting basket tilt" Basket tilt up	⊙		⊙	
		"Lowering basket tilt" Basket tilt down	⊙		⊙	
		"Lifting jib tilt" Jib tilt up	⊙		⊙	
		"Lowering jib tilt" Jib tilt down	⊙		⊙	
		"Basket rotation" Basket rotation	⊙		⊙	
		"Extend jib telescop" Jib telescope extension	⊙		⊙	
		"Retract jib telescop" Jib telescope retraction	⊙		⊙	
		"Leveling" Attitude levelling	⊙		⊙	
		"Auto leveling jib tilt" Automatic correction of jib tilt	⊙		⊙	
		"Lifting Y control" Y control raising	⊙		⊙	
		"Lowering Y control" Y control lowering	⊙		⊙	
		"Extend X control" X control extension	⊙		⊙	
		"Retract X control" X control retraction	⊙		⊙	
		"Driving" Platform travel	⊙		⊙	
		"Steering" Platform steering	⊙		⊙	
		"Generator activation" Generator activation	⊙		⊙	
		"Engine starter" Engine start-up	⊙		⊙	
	"Defaults history" Fault history		⊙		⊙	

NB: The texts in inverted commas are displayed when the language "English" (English) is selected.

647772 (16/09/2020)
260 TJ-XP ST3A S1 / 280 TJ-X ST3A S1

⚠ IMPORTANT ⚠

Part 1 - INSTRUCTIONS AND SAFETY INSTRUCTIONS must be read and understood before operating the platform.

TRANSPORT/WORKING POSITION

TRANSPORT POSITION

The platform in transport position when:

- The main arm is completely lowered.
- The telescope is completely retracted.
- The jib telescope is completely retracted (only for 280 TJ-X ST3A S1).

NB: The jib may or may not be raised. The turntable and basket may or may not be turned.

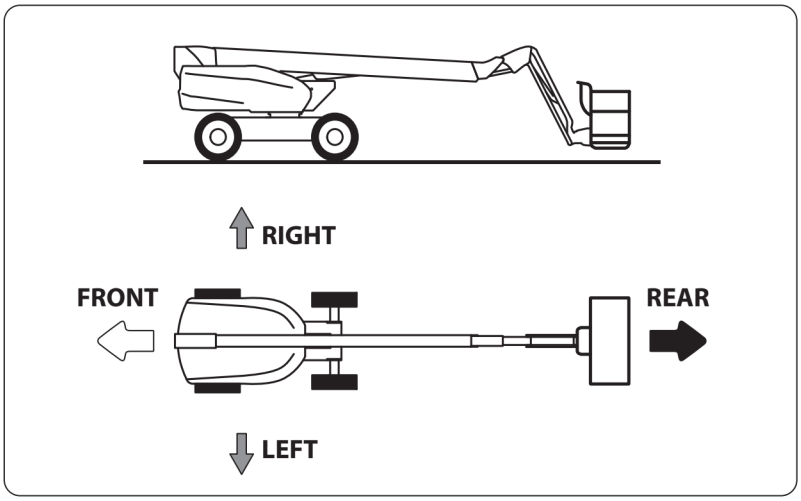

The turntable and the basket are in the neutral position when the main arm and the basket are parallel to the platform chassis, with the basket between the 2 rear wheels.

Front, rear, left and right are defined as follows:

- The platform is in transport position.
- The turntable and basket are in the neutral position.
- The operator is in the basket facing the direction of the front wheels.

The driving speeds, TORTOISE, RAMP and HARE, can only be selected in the transport position.

When driving the platform over a long distance, it is recommended to:

- Place the platform in the transport position.
- Put the turntable and basket in neutral position.
- Raise the jib slightly for better visibility.
- Drive the platform forwards.

Use RAMP speed (slow speed with full power) to travel on steep slopes, move over very rough terrain or go up/down transport truck loading ramps.

NB: Depending on conditions, restrictions may apply to the speed activated, refer to the following page.

WORKING POSITION

⚠ IMPORTANT ⚠

Travelling over rough terrain, on unstable ground, on slopes that are steeper than those authorised, (◁ SPECIFICATIONS) or in any other conditions likely to cause the platform to tip up or become destabilised, is PROHIBITED.

The platform is in the transport position when:

- The main arm is not completely lowered.
- The telescope is not completely retracted.
- The jib telescope is not completely retracted (only for 280 TJ-X ST3A S1).

NB: The jib may or may not be raised. The turntable and basket may or may not be turned.

WORKING POSITION driving speed is automatically activated when the platform is in working position.

647772 (16/09/2020)
260 TJ-XP ST3A S1 / 280 TJ-X ST3A S1

DRIVING SPEED ACTIVATED DEPENDING ON THE STEERING MODE SELECTED, THE POSITION OF THE TURNTABLE AND THE DRIVING SPEED SELECTED (TRANSPORT POSITION ONLY)

		DRIVING SPEED SELECTED		
		TORTOISE	RAMP	HARE
STEERING MODE SELECTED	POSITION OF THE TURNTABLE	DRIVING SPEED ACTIVATED		
4 STEERING WHEELS 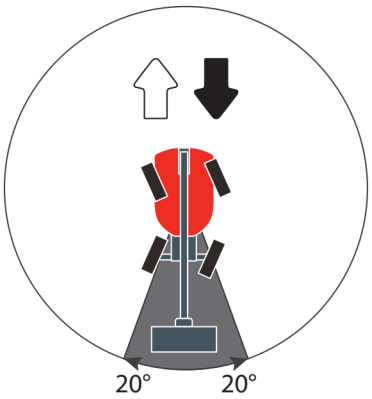	< 20°	TORTOISE	RAMP	RAMPE (1)
	> 20° < 90°	SLOW	SLOW	SLOW (1)
	> 90°	SLOW (1)	SLOW (1)	SLOW (1)
2 STEERING WHEELS 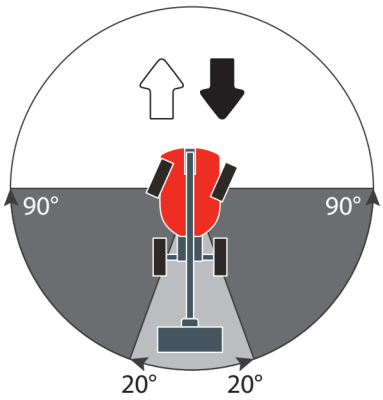	< 20°	TORTOISE	RAMP	HARE (1) / RAMP (1)
	> 20° < 90°	TORTOISE	RAMP (1)	RAMP (1)
	> 90°	SLOW (1)	SLOW (1)	SLOW (1)
CRAB 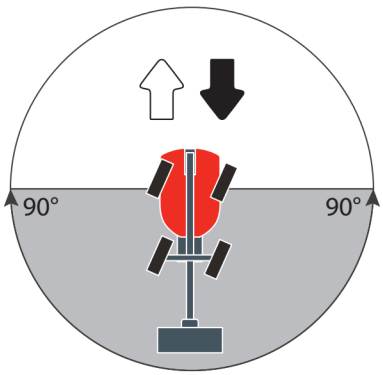	< 20°	TORTOISE	RAMP	HARE (1) / RAMP (1)
	> 20° < 90°	TORTOISE	RAMP	HARE (1) / RAMP (1)
	> 90°	SLOW (1)	SLOW (1)	SLOW (1)

(1): Driving and turntable rotation cannot be actioned simultaneously.
NB: SLOW speed is activated automatically and cannot be selected manually.

647772 (16/09/2020)
260 TJ-XP ST3A S1 / 280 TJ-X ST3A S1

OPERATION FROM THE GROUND LEVEL CONTROL PANEL

⚠ IMPORTANT ⚠

◅ CONTROL PANEL AND SAFETY DEVICES ON THE GROUND for detailed information about the ground controls.

SWITCH THE PLATFORM ON

- Ensure that the emergency stop buttons on the ground and basket control panels and the remote control unit are in the ON position.
- BATTERY CUT-OFF option: Turn the battery cut-off to the ON position.
- Turn the ignition switch to position .

Result:

- The interface screen lights up, ◅ SCREEN DISPLAY: DESCRIPTION OF PAGES.

NB: SECONDARY PROTECTION SYSTEM option SPS - FIRST VERSION, ◅ OPTIONS.

NB: SECONDARY PROTECTION SYSTEM option SPS - SECOND VERSION, ◅ OPTIONS.

NB: The horn sounds twice and one specific alarm page is displayed when the platform is turned on without starting the engine in the next 10 seconds, ◅ SCREEN DISPLAY - DESCRIPTION OF PAGES: ALARM PAGES.

TURN THE PLATFORM OFF

- Turn the ignition switch to position .
- BATTERY CUT-OFF option: Turn the battery cut-off to the OFF position.

START THE ENGINE

- Switch on the platform.
- Wait for the preheat cycle to finish, ◅ SCREEN DISPLAY - DESCRIPTION OF PAGES.
- Start the engine, ◅ ENGINE STARTER BUTTON and ◅ ENGINE STARTING MODE BUTTON if the outside temperature is lower than -10 °C.
- If the engine does not start:
  - Turn the ignition switch to position , turn it to position .
  - Wait for the preheat cycle to finish and try to start the engine again.

NB: Consult the maintenance personnel if the engine fails to start after several attempts.

SWITCH OFF THE ENGINE

⚠ IMPORTANT ⚠

Wait several minutes for the engine to cool down before stopping it after intensive use.

- Turn ignition key to position  or press the emergency stop button (OFF position).

POSITION THE BASKET

- Ensure that the turntable is unlocked, ◅ SAFETY COMPONENTS: TURNTABLE LOCKING PIN.

NB: It is essential that the turntable is locked when the platform is being transported or lifted, ◅ TRANSPORTING THE PLATFORM and ◅ 3 - MAINTENANCE: OCCASIONAL OPERATION: LIFTING THE PLATFORM.

- Push and hold the ground/basket control selection switch to the right .
- Press the appropriate control keys to activate the platform controls.
- Release the keys or the switch to stop the activated controls.

NB: Use key combinations to operate the simultaneous controls, ◅ SIMULTANEOUS CONTROLS.

EMERGENCY STOP

- Press the emergency stop button (OFF position).

647772 (16/09/2020)
260 TJ-XP ST3A S1 / 280 TJ-X ST3A S1

OPERATION FROM THE BASKET CONTROL PANEL

⚠ IMPORTANT ⚠

◅ CONTROL PANEL AND SAFETY DEVICES IN THE BASKET for detailed information about the controls in the basket.
Make sure that the basket is level before putting the platform in transport position, ◅ PLATFORM OPERATION: TRANSPORT/WORKING POSITION.
KEY LOCK OPTION FOR TURNTABLE COVERS: to guarantee access to the emergency controls, the right turntable cover must be unlocked before operating the platform from the basket.

TURN THE PLATFORM ON/OFF

◅ OPERATION FROM THE GROUND LEVEL CONTROL PANEL.

START THE ENGINE

- Switch on the platform.
- Wait for the preheat cycle to finish, ◅ PREHEAT INDICATOR LIGHT.
- Start the engine, ◅ ENGINE STARTER BUTTON.

NB: ◅ OPERATING FROM THE GROUND CONTROL PANEL if the outside temperature is lower than -10 °C.

- If the engine does not start:
  - Press the emergency stop button (OFF position), turn it a quarter turn to the right and release it (ON position).
  - Wait for the preheat cycle to finish and try to start the engine again.

NB: Consult the maintenance personnel if the engine fails to start after several attempts.

SWITCH OFF THE ENGINE

⚠ IMPORTANT ⚠

Wait several minutes for the engine to cool down before stopping it after intensive use.

- Press the emergency stop button (OFF position).

DRIVE AND STEER

⚠ IMPORTANT ⚠

Always refer to the arrow colours on the chassis and on the control panel in the basket before driving/steering the platform.

- Ensure that the turntable is unlocked, ◅ SAFETY COMPONENTS: TURNTABLE LOCKING PIN.

NB: It is essential that the turntable is locked when the platform is being transported or lifted, ◅ TRANSPORTING THE PLATFORM and ◅ 3 - MAINTENANCE: OCCASIONAL OPERATION: LIFTING THE PLATFORM.

- Put the driving speed selection switch into the desired speed position.
- Put the driving speed selection switch into the desired steering position.
- Press and hold down the foot switch.
- Use the appropriate control handle to drive, steer and brake.

POSITION THE BASKET

- Ensure that the turntable is unlocked, ◅ SAFETY COMPONENTS: TURNTABLE LOCKING PIN.

NB: It is essential that the turntable is locked when the platform is being transported or lifted, ◅ TRANSPORTING THE PLATFORM and ◅ 3 - MAINTENANCE: OCCASIONAL OPERATION: LIFTING THE PLATFORM.

- Press and hold down the foot switch.
- Use the appropriate buttons, switches and/or control handles to operate the platform controls.
- Release the buttons, switches and/or control handles or the foot switch to stop controls that have been activated.

NB: Use key combinations to operate the simultaneous controls, ◅ SIMULTANEOUS CONTROLS.

EMERGENCY STOP

- Press the emergency stop button (OFF position).

OPERATION FROM THE REMOTE CONTROL UNIT

⚠ IMPORTANT ⚠

The turntable must be locked when using the remote control unit, ◅ TRANSPORTING THE PLATFORM and ◅ 3 -MAINTENANCE: OCCASIONAL OPERATION: LIFTING THE PLATFORM

◅ REMOTE CONTROL UNIT for detailed information about the remote controls.

The remote control unit is only activated when:

- The turntable angle is less than 90° (to left or right) in relation to the neutral position.
- The angle of the main arm is 15° maximum in relation to the completely lowered position.
- The telescope is completely retracted.
- The jib telescope is completely retracted (280 TJ-X ST3A S1).

TURN THE PLATFORM ON/OFF

◅ OPERATION FROM THE GROUND LEVEL CONTROL PANEL.

START THE ENGINE (DEPENDING ON VERSION)

- Switch on the platform.
- Wait for the preheat cycle to finish, ◅ SCREEN DISPLAY - DESCRIPTION OF PAGES.
- Start the engine, ◅ ENGINE STARTER BUTTON.

NB: ◅ OPERATING FROM THE GROUND CONTROL PANEL if the outside temperature is lower than -10 °C.

- If the engine does not start:
  - Press the emergency stop button (OFF position).
  - First version: Turn the button a quarter turn to the right and release it (ON position).
  - Second version: Pull the button or turn it a quarter turn to the right and release it (ON position).
  - Wait for the preheat cycle to finish and try to start the engine again.

NB: Consult the maintenance personnel if the engine fails to start after several attempts.

SWITCH OFF THE ENGINE

- Press the emergency stop button (OFF position).

POSITION THE BASKET

- Press and hold down the activation button.
- Press and hold down the appropriate control buttons to activate the platform controls.
- Release the control buttons or the activation button to stop controls that have been activated.

NB: Use key combinations to operate the simultaneous controls, ◅ SIMULTANEOUS CONTROLS.

EMERGENCY STOP

- Press the emergency stop button (OFF position).

SIMULTANEOUS CONTROLS

NB: The audible warning sounds twice when the controls cannot be operated simultaneously.

GROUND CONTROL PANEL

In transport/working position: a maximum of 2 controls can be operated simultaneously.

CONTROL PANEL IN THE BASKET

In transport/working position: a maximum of 4 controls can be operated simultaneously.

REMOTE CONTROL UNIT

In transport/working position: a maximum of 2 controls can be operated simultaneously.

CONTROLS LOCKED

Some controls are locked (refer to the tables on the next page):

- When the basket load has reached maximum capacity (OVERLOAD ALARM).
- When the platform is on a steep slope (TILT/OSCILLATION ALARM).
- When a locking fault in the oscillating axle is detected (TILT/OSCILLATION ALARM).
- When a telescope cable slack or cut (CABLE BREAKAGE ALARM).

647772 (16/09/2020)
260 TJ-XP ST3A S1 / 280 TJ-X ST3A S1

TRANSPORT POSITION

CONTROLS COMMON TO GROUND LEVEL AND BASKET	OVERLOAD ALARM	TILT/OSCILLATION ALARM	CABLE BREAKAGE ALARM
RAISE THE MAIN ARM	LOCKED	LOCKED	
EXTEND THE TELESCOPE	LOCKED	LOCKED	LOCKED
TURN THE TURNTABLE (LEFT/RIGHT)	LOCKED		
RAISE/LOWER THE JIB	LOCKED		
EXTEND THE JIB TELESCOPE - ONLY FOR 280 TJ-X ST3A S1	LOCKED	LOCKED	LOCKED
TILT BASKET/JIB UP	LOCKED	LOCKED	
TILT BASKET/JIB DOWN	LOCKED	LOCKED	

SPECIFIC CONTROLS IN THE BASKET	OVERLOAD ALARM	TILT/OSCILLATION ALARM	CABLE BREAKAGE ALARM
TILT THE BASKET UPWARDS/DOWNWARDS - ONLY FOR 280 TJ-X ST3A S1	LOCKED	LOCKED	
TURN THE BASKET (LEFT/RIGHT)	LOCKED		
DRIVE (FORWARD/BACKWARD)	LOCKED		
STEER (LEFT/RIGHT)	LOCKED		

WORKING POSITION

CONTROLS COMMON TO GROUND LEVEL AND BASKET		OVERLOAD ALARM	TILT/OSCILLATION ALARM	CABLE BREAKAGE ALARM
RAISE THE MAIN ARM	TELESCOPE RETRACTED	LOCKED	LOCKED	
	TELESCOPE EXTENDED	LOCKED	LOCKED	LOCKED
LOWER THE MAIN ARM	TELESCOPE RETRACTED	LOCKED		
	TELESCOPE EXTENDED	LOCKED	LOCKED	LOCKED
EXTEND THE TELESCOPE		LOCKED	LOCKED	LOCKED
RETRACT THE TELESCOPE		LOCKED		
TURN THE TURNTABLE (LEFT/RIGHT)	TELESCOPE RETRACTED	LOCKED		
	TELESCOPE EXTENDED	LOCKED	LOCKED	
RAISE/LOWER THE JIB - ONLY FOR 260 TJ-XP ST3A S1		LOCKED		
RAISE/LOWER THE JIB - ONLY FOR 280 TJ-X ST3A S1	JIB TELESCOPE RETRACTED	LOCKED		
	JIB TELESCOPE EXTENDED	LOCKED	LOCKED	LOCKED
EXTEND THE JIB TELESCOPE - ONLY FOR 280 TJ-X ST3A S1		LOCKED	LOCKED	
RETRACT THE JIB TELESCOPE - ONLY FOR 280 TJ-X ST3A S1		LOCKED		
TILT BASKET/JIB UP		LOCKED	LOCKED	
TILT BASKET/JIB DOWN		LOCKED	LOCKED	

SPECIFIC CONTROLS IN THE BASKET	OVERLOAD ALARM	TILT/OSCILLATION ALARM	CABLE BREAKAGE ALARM
TURN THE BASKET (LEFT/RIGHT)	LOCKED		
DRIVE (FORWARD/BACKWARD)	LOCKED	LOCKED	
STEER (LEFT/RIGHT)	LOCKED	LOCKED	

647772 (16/09/2020)
260 TJ-XP ST3A S1 / 280 TJ-X ST3A S1

TRANSPORTING THE PLATFORM

⚠ IMPORTANT ⚠

Check that the safety instructions associated with the flatbed have been correctly applied before loading the platform and ensure that the driver of the vehicle has been informed of the dimensional characteristics and total weight of the platform.
Ensure that the flatbed has adequate dimensions and load capacity for transporting the platform, ◁ SPECIFICATIONS and STICKERS.
It is essential that the turntable is locked when the platform is being transported, ◁ SAFETY COMPONENTS: TURNTABLE LOCKING PIN.
Covers must be closed and locked (if applicable) while the platform is being transported.

LOADING/UNLOADING THE PLATFORM

⚠ IMPORTANT ⚠

The flatbed must be parked on a level surface. The wheels must be blocked with shims (1).
The loading ramps must be attached to the flatbed so as to obtain as small an angle (2) as possible.
Turntable rotation is prohibited while the platform is being loaded onto the flatbed truck and during unloading.
The turntable must be locked before loading the platform onto a flatbed truck or before unloading it, ◁ SAFETY COMPONENTS: TURNTABLE LOCKING PIN.
The platform must be loaded or unloaded using a winch if the loading ramps are slippery, ◁ 3 - MAINTENANCE: OCCASIONAL OPERATION: PLATFORM WINCHING.
The platform must be loaded and unloaded using a crane if the angle of the loading ramps exceeds the maximum slope accessible, ◁ 3 - MAINTENANCE: OCCASIONAL OPERATION: LIFTING THE PLATFORM.

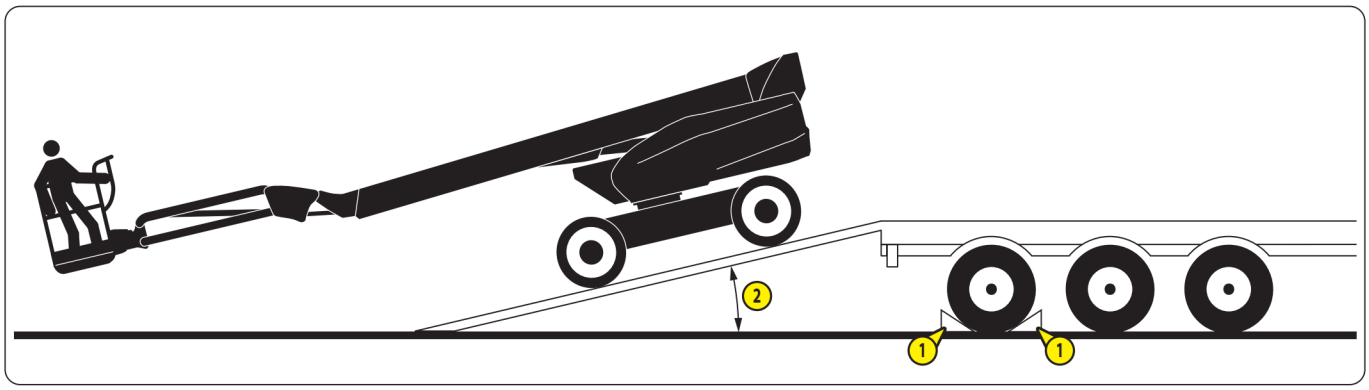

LOADING THE PLATFORM ONTO THE FLATBED

- From the ground control panel:
  - Switch on the engine.
  - Put the platform in transport position; put the turntable in neutral position, ◁ PLATFORM OPERATION: TRANSPORT/WORKING POSITION.
  - Fully lower the jib.
- Lock the turntable, ◁ SAFETY COMPONENTS: TURNTABLE LOCKING PIN.
- Enter the basket.
- Put the basket in the neutral position, ◁ PLATFORM OPERATION: TRANSPORT/WORKING POSITION.
- Raise the jib slightly to prevent the basket hitting the ground or the loading ramps.
- Select RAMP speed .
- Drive the platform forwards slowly with the basket at the bottom of the ramp, see illustration above.

UNLOADING THE PLATFORM FROM THE FLATBED

NB: The platform is in TRANSPORT position Ⓐ, ◁ CONFIGURING THE PLATFORM FOR TRANSPORT on the next page.

Ensure that the turntable is unlocked, ◁ SAFETY COMPONENTS: TURNTABLE LOCKING PIN.

- From the ground control panel or from the remote control unit (depending on version):
  - Switch on the engine.
- Enter the basket.
- Raise the jib slightly to prevent the basket hitting the ground or the loading ramps.
- Select RAMP speed 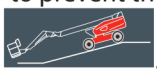.
- Drive the platform backwards slowly with the basket at the bottom of the ramp, see illustration on previous page.

647772 (16/09/2020)
260 TJ-XP ST3A S1 / 280 TJ-X ST3A S1

CONFIGURING THE PLATFORM FOR TRANSPORT

⚠ IMPORTANT ⚠

Turntable rotation is prohibited once on the flatbed.

It is essential that the turntable remains locked when the platform is on the flatbed, ◁ SAFETY COMPONENTS: TURNTABLE LOCKING PIN.

The platform must be transported in FOLDED POSITION (B).

(A)

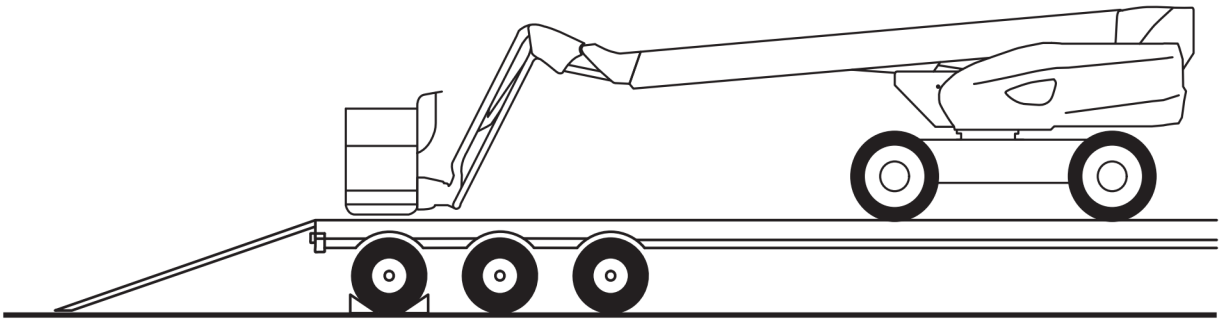

(B) **260 TJ-XP ST3A S1**

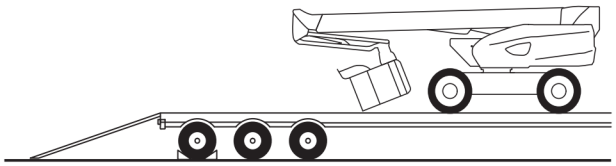

(B) **280 TJ-X ST3A S1**

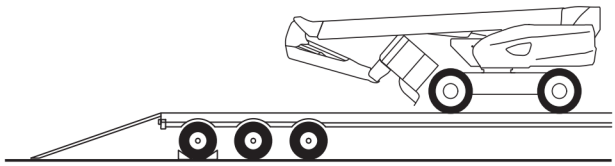

260 TJ-XP ST3A S1 - FOLDED POSITION (B):

NB: The engine has been started. The platform is in the transport position, the turntable and the basket are in neutral position. The turntable is locked.

- Fully lower the jib.
- Get out of the basket.
- From the ground control panel or from the remote control unit:
  - (1) Raise the main arm (15° maximum).
  - (2) Tilt the basket/jib downwards to fold the basket under the main arm. Ensure that the basket cannot hit the flatbed.
  - (3) Lower the main arm so that the basket is a distance of about 10 cm from the flatbed.
- Stop the engine. Switch off the power to the platform. Remove the key.

NB: ◁ STICKERS: FOLDING/UNFOLDING THE PLATFORM.

260 TJ-XP ST3A S1 - MOVE FROM THE FOLDED POSITION (B) TO THE TRANSPORT POSITION (A):

NB: The turntable is locked.

- From the ground control panel or from the remote control unit (depending on version):
  - Switch on the engine.
  - (4) Raise the main arm (15° maximum).
  - (5) Tilt the basket/jib upwards until the basket floor is horizontal. Ensure that the basket cannot hit the flatbed.
  - (6) Fully lower the main arm.
- Stop the engine. Switch off the power to the platform.

NB: ◁ STICKERS: FOLDING/UNFOLDING THE PLATFORM.

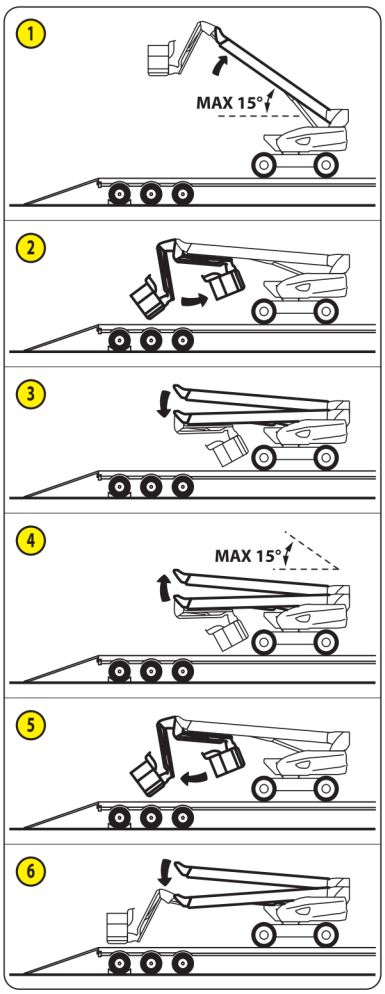

280 TJ-X ST3A S1 - FOLDED POSITION (B):

NB: The engine has been started. The platform is in the transport position, the turntable and the basket are in neutral position. The turntable is locked.

- Fully lower the jib.
- Get out of the basket.
- From the remote control unit:
  - (1) Raise the main arm (15° maximum).
  - (2) Tilt the basket fully downwards. Ensure that the basket cannot hit the flatbed.
  - (3) Tilt the basket/jib downwards to fold the basket under the main arm. Ensure that the basket cannot hit the flatbed.
  - (4) Lower the main arm so that the basket is a distance of about 10 cm from the flatbed.
- Stop the engine. Switch off the power to the platform. Remove the key.

NB: ◁ STICKERS: FOLDING/UNFOLDING THE PLATFORM

280 TJ-X ST3A S1 - MOVE FROM THE FOLDED POSITION (B) TO THE TRANSPORT POSITION (A):

NB: The turntable is locked.

- From the ground control panel or from the remote control unit (depending on version):
  - Switch on the engine.
  - (5) Raise the main arm (15° maximum).
  - (6) Tilt the basket/jib upwards until the gauge (C) reaches mark 0° on the sticker (D) ◁ STICKER: JIB ANGLE. Ensure that the basket cannot hit the flatbed.
  - (7) Tilt the basket/jib upwards until the basket floor is horizontal. Ensure that the basket cannot hit the flatbed.
  - (8) Fully lower the main arm.
- Stop the engine. Switch off the power to the platform.

NB: ◁ STICKERS: FOLDING/UNFOLDING THE PLATFORM.

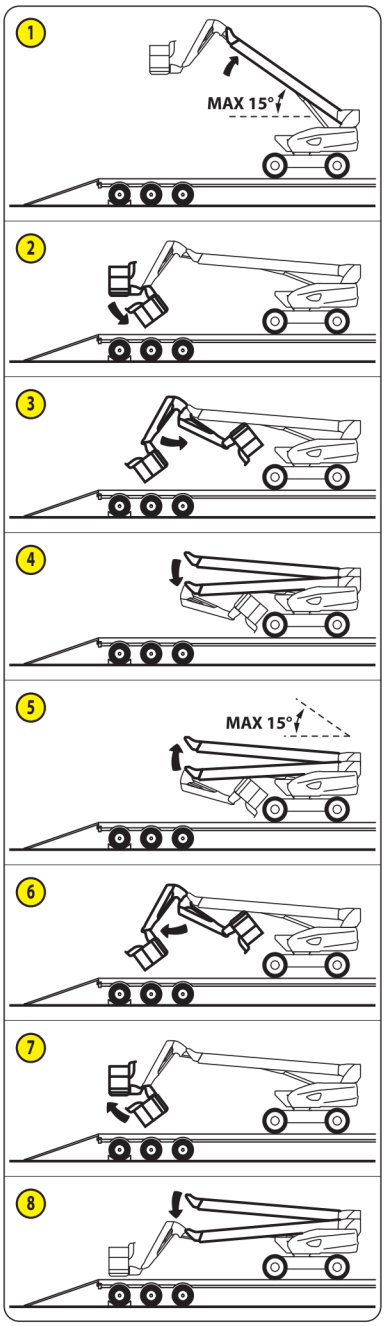

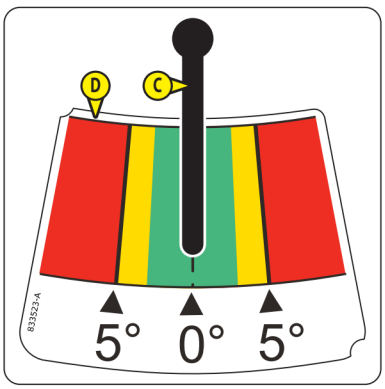

⚠ IMPORTANT ⚠

Turntable rotation is prohibited once on the flatbed.
It is essential that the turntable remains locked when the platform is on the flatbed, ◁ SAFETY COMPONENTS: TURNTABLE LOCKING PIN.
The platform is equipped with 8 anchorage points (◁ STICKERS: ANCHORAGE POINT); comply with the country's regulations concerning the minimum number of anchorage points required when transporting a platform.
Ensure that the platform is correctly secured to the flatbed.

260 TJ-XP ST3A S1

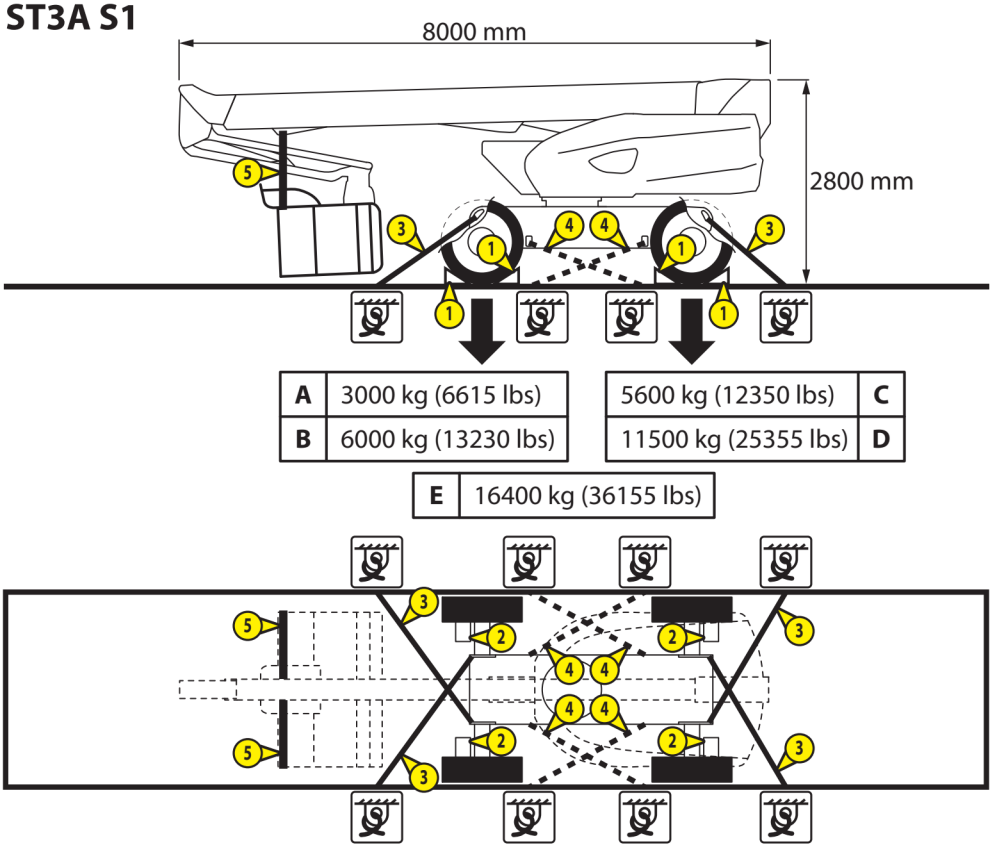

KEY:

A	**C**	"LOAD ON 1 WHEEL" LOAD ON 1 WHEEL
B	**D**	"LOAD ON 2 WHEELS" LOAD ON 2 WHEELS
E		"TOTAL MASS" TOTAL WEIGHT

NB: The platform is powered down. The platform is in FOLDED position (B), ◁ CONFIGURING THE PLATFORM FOR TRANSPORT. The turntable is locked.

- Ensure that the platform is switched off: The key switch must be in the position, the key must be removed and the battery cut-off (option) must be in the OFF position.
- Ensure that the turntable is unlocked, ◁ SAFETY COMPONENTS: TURNTABLE LOCKING PIN.
- Fix chocks (1) to the flatbed truck at the front and rear of each of the platform's wheels.
- Fix chocks (2) to the flatbed on the inner side of each of the platform's wheels.
- Secure the platform to the flatbed truck with straps or chains (3) and/or (4) (according to country regulations) attached to the platform's anchorage points, ◁ STICKERS: ANCHORAGE POINT.
- Attach the basket with 2 straps (5) (supplied with the platform). Do not overtighten to avoid damage.

NB: ◁ 2 - DESCRIPTION: STICKERS: ANCHORAGE.

647772 (16/09/2020)
260 TJ-XP ST3A S1 / 280 TJ-X ST3A S1

280 TJ-X ST3A S1

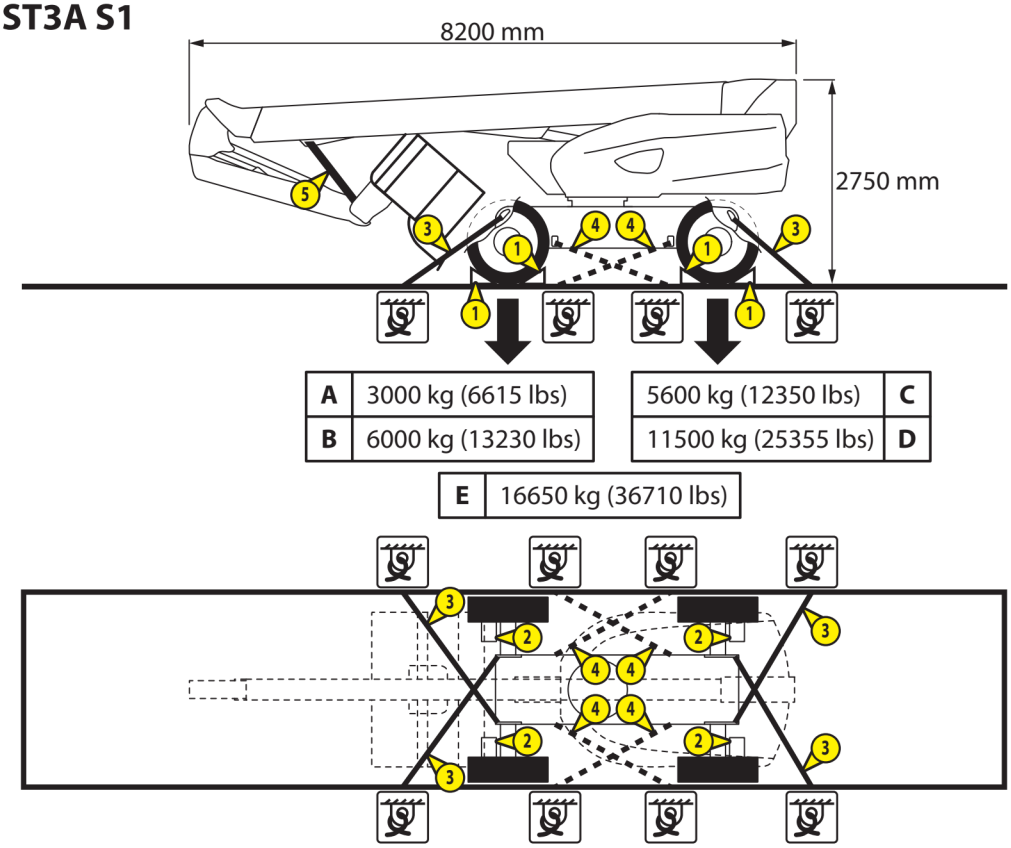

KEY:

A	**C**	"LOAD ON 1 WHEEL" LOAD ON 1 WHEEL
B	**D**	"LOAD ON 2 WHEELS" LOAD ON 2 WHEELS
E		"TOTAL MASS" TOTAL WEIGHT

NB: The platform is powered down. The platform is in FOLDED position (B), ◁ CONFIGURING THE PLATFORM FOR TRANSPORT. The turntable is locked.

- Ensure that the platform is switched off: The key switch must be in the position, the key must be removed and the battery cut-off (option) must be in the OFF position.
- Ensure that the turntable is unlocked, ◁ SAFETY COMPONENTS: TURNTABLE LOCKING PIN.
- Fix chocks (1) to the flatbed truck at the front and rear of each of the platform's wheels.
- Fix chocks (2) to the flatbed on the inner side of each of the platform's wheels.
- Secure the platform to the flatbed truck with straps or chains (3) and/or (4) (according to country regulations) attached to the platform's anchorage points, ◁ STICKERS: ANCHORAGE POINT.
- Attach the jib with 1 strap (5) (supplied with the platform). Do not overtighten to avoid damage.

NB: ◁ 2 - DESCRIPTION: STICKERS: ANCHORAGE.

RESCUE PROCEDURE

⚠ IMPORTANT ⚠

This procedure should be read and fully understood by the operator and any other persons likely to be involved with working on the platform in the event of a breakdown or a person getting trapped in the basket.

SHOULD THE USER FEEL ILL - PRIORITY CONTROLS



If the operator in the basket should fall ill or find himself incapable of manoeuvring, the person present on the ground can take over the platform controls from the ground based control panel.

If the engine has been started:

- Push and hold the switch (1) to the right .
- Lower the basket using the appropriate control keys.
- Release the keys or the switch to stop the activated controls.

If the engine has not been started and the emergency stop button in the basket is in the ON position (interface is turned on):

- Switch on the engine.
- Push and hold the switch (1) to the right .
- Lower the basket using the appropriate control keys.
- Release the keys or the switch to stop the activated controls.

If the engine has not been started and the emergency stop button in the basket is in the OFF position (interface screen is off):

- Push and hold the switch (1) to the right .
- Wait for the preheat cycle to finish and start up the engine.
- Lower the basket using the appropriate control keys.
- Release the keys or the switch to stop the activated controls.

IF THERE IS A BREAKDOWN - EMERGENCY CONTROLS FROM THE BASKET



⚠ IMPORTANT ⚠

The backup pump should be activated for a maximum of 4 minutes, then wait 10 minutes before reactivating the pump for a new 4 minute cycle.

Do not try to use the controls simultaneously.

When a fault occurs in the engine, the platform has a backup pump, which can be activated from the basket control panel, allowing a return to the ground.

- Press and hold down the backup pump button (1) to activate the backup pump.
- Use the appropriate switch or the appropriate control handle to activate a platform control.
- Release the switch or the control handle to stop the control that has been activated.
- Release the backup pump button.

NB: It is not possible to drive/steer the platform.

IF THERE IS AN ACCIDENT OR BREAKDOWN - EMERGENCY CONTROLS

⚠ IMPORTANT ⚠

The tilt alarm and overload alarm may no longer be active while the emergency controls are in use.
The backup pump should be activated for a maximum of 4 minutes, then wait 10 minutes before reactivating the pump for a new 4 minute cycle.

If an accident or breakdown occurs making the control panels at ground level and in the basket unusable, the platform is provided with emergency controls, which enable certain platform controls to be operated.

- Open the right-hand turntable cover.
- Locate the various components of the emergency controls:
  - Backup pump button (1).
  - Proportional distributor (2) and manual controls (2A) to (2E).
  - Lever (3).
  - Secondary distributor (4) and manual control (4A).
- Use the controls described in the following pages.

NB: Refer to the stickers BACKUP PUMP (A) and EMERGENCY CONTROL PROCEDURE (C) and (B), ◁ STICKERS.

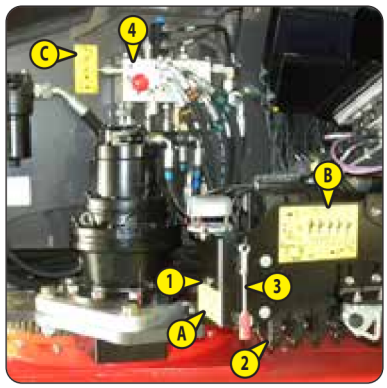

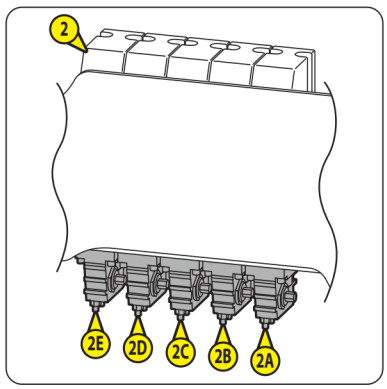

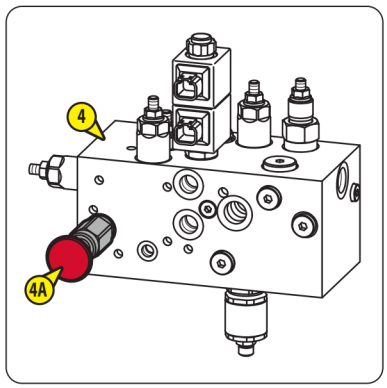



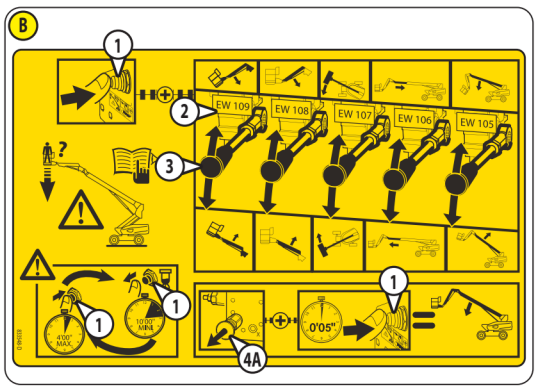

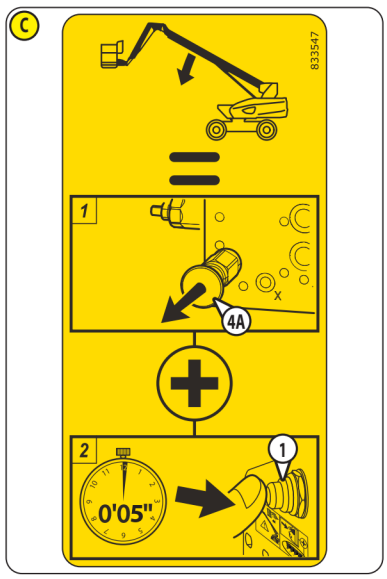

EMERGENCY CONTROLS FROM THE PROPORTIONAL DISTRIBUTOR (2)

A- RAISE THE MAIN ARM

1 - Place the lever (3) on the manual control (2A).
2 - Press the backup pump button (1) and hold it down.
3 - Push the lever down to raise the main arm, stop when the desired position is reached. Release the backup pump button. Remove the lever.

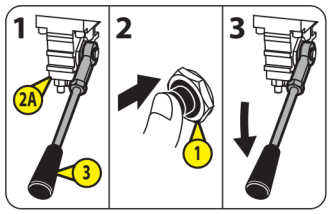

B- LOWER THE MAIN ARM

1 - Place the lever (3) on the manual control (2A).
2 - Press the backup pump button (1) and hold it down.
3 - Push the lever up to lower the main arm, stop when the desired position is reached. Release the backup pump button. Remove the lever.

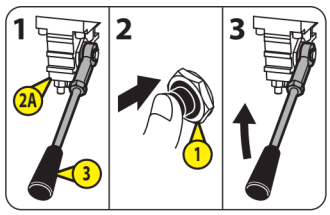

C - EXTEND THE TELESCOPE

1 - Place the lever (3) on the manual control (2B).
2 - Press the backup pump button (1) and hold it down.
3 - Push the lever down to extend the telescope, stop when the desired position is reached. Release the backup pump button. Remove the lever.

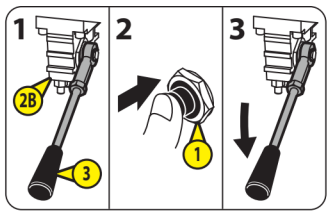

D - RETRACT THE TELESCOPE

1 - Place the lever (3) on the manual control (2B).
2 - Press the backup pump button (1) and hold it down.
3 - Push the lever up to retract the telescope, stop when the desired position is reached. Release the backup pump button. Remove the lever.

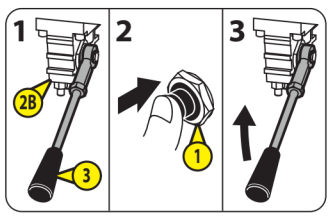

E- TURN THE TURNTABLE TO THE LEFT

1 - Place the lever (3) on the manual control (2C).
2 - Press the backup pump button (1) and hold it down.
3 - Push the lever down to turn the turntable to the left, stop when the desired position is reached. Release the backup pump button. Remove the lever.

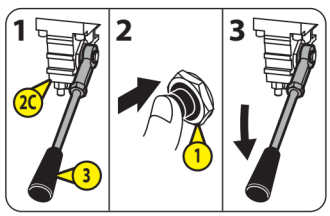

F- TURN THE TURNTABLE TO THE RIGHT

1 - Place the lever (3) on the manual control (2C).
2 - Press the backup pump button (1) and hold it down.
3 - Push the lever up to turn the turntable to the right, stop when the desired position is reached. Release the backup pump button. Remove the lever.

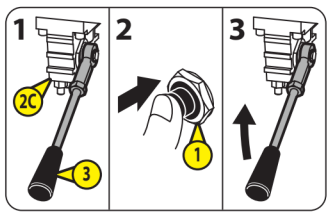

G- RAISE THE JIB

1 - Place the lever (3) on the manual control (2D).
2 - Press the backup pump button (1) and hold it down.
3 - Push the lever down to raise the jib, stop when the desired position is reached. Release the backup pump button. Remove the lever.

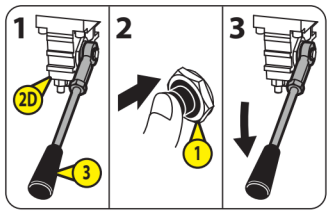

H- LOWER THE JIB

1 - Place the lever (3) on the manual control (2D).
2 - Press the backup pump button (1) and hold it down.
3 - Push the lever up to lower the jib, stop when the desired position is reached. Release the backup pump button. Remove the lever.

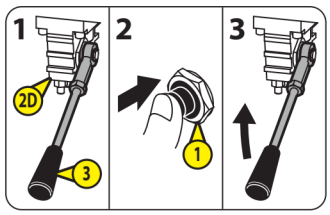

I- TILT BASKET/JIB UPWARDS

1 - Place the lever (3) on the manual control (2E).
2 - Press the backup pump button (1) and hold it down.
3 - Push the lever down to tilt the basket/jib upwards, stop when the desired position is reached. Release the backup pump button. Remove the lever.

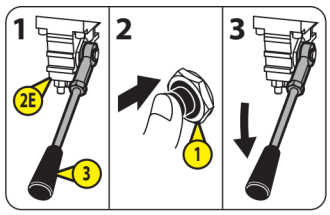

J- TILT BASKET/JIB DOWNWARDS

1 - Place the lever (3) on the manual control (2E).
2 - Press the backup pump button (1) and hold it down.
3 - Push the lever up to tilt the basket/jib downwards, stop when the desired position is reached. Release the backup pump button. Remove the lever.

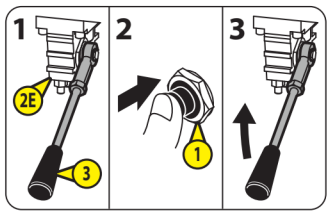

EMERGENCY CONTROLS FROM THE SECONDARY DISTRIBUTOR (4)

K- LOWER THE MAIN ARM

1 - Pull the manual control (4A) and hold it.
2 - Press and hold down the backup pump button (1) and hold it down for 5 seconds. Release the backup control once the main arm is lowered.

NB: If necessary, correct the tilt of the basket/jib, ◁ EMERGENCY CONTROLS FROM THE PROPORTIONAL DISTRIBUTOR (2).

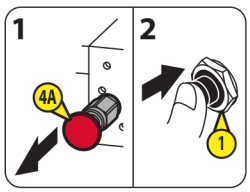

647772 (16/09/2020)
260 TJ-XP ST3A S1 / 280 TJ-X ST3A S1

OPTIONS

KEY LOCK FOR TURNTABLE COVERS

⚠ IMPORTANT ⚠

To guarantee access to the emergency controls, the right turntable cover must be unlocked before using the platform from the basket.

GENERATOR

⚠ IMPORTANT ⚠

Do not connect the cord extensions, power supply bars or plugs with multiple sockets to the electric power socket in the basket.

Overvoltages could occur when the generator is started.

The engine must be started to activate the generator.

- Press generator button (1) and release it to start the generator.
- Plug an electrical appliance into the electrical outlet in the basket.
- Press the generator button (1) and release it to stop the generator.

NB:

- Generator 220 V/3.5 kW: 1 electric power socket delivering 220 V/16 A maximum.
- Generator 220 V/5 kW: 2 electric power sockets delivering 220 V/16 A maximum.

The generator has a circuit breaker for resetting it:

- Press the generator button (1) and release it to stop the generator.
- Open the cover (A) at the rear of the turntable.
- Locate the switch (2) on the generator
- Push it to the ON position.

Result:

- The switch must remain in the ON position, the indicator (3) should be red.

- Press the generator button and release it to start the generator.
- Check that the switch remains in the ON position and that the indicator is red.
- Close the cover (A).

NB: Refer to the maintenance personnel if the circuit breaker is not working correctly.



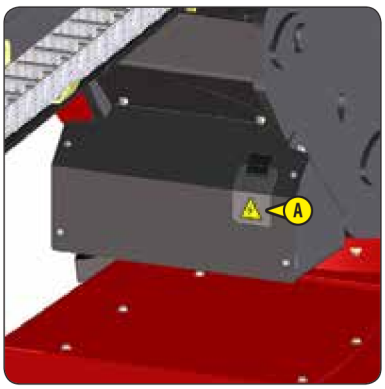

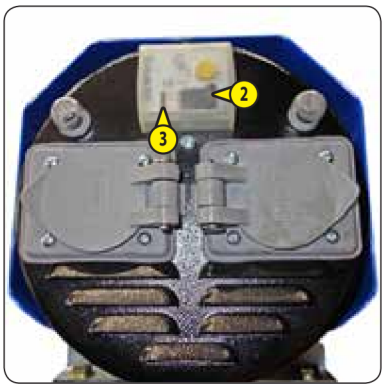

SECONDARY PROTECTION SYSTEM SPS - FIRST VERSION

⚠ IMPORTANT ⚠

Operate the controls extremely carefully during attempts at clearance.

If the audible alarm sounds intermittently and rapidly and the flashing light SPS (1) flashes rapidly: The platform can be used, but the secondary protection system SPS is deactivated; consult the maintenance personnel.

NB: The audible alarm sounds once and the blue flashing light SPS (1) flashes several times when the platform is powered up. This indicates that the secondary protection system SPS is operating correctly.

NB: The flashing light SPS (1) may be blue or red depending on the country.



OPERATION DESCRIPTION

If you are trapped between the safety strap SPS (2) and a structure (A):

- All of the platform controls are stopped and locked.
- The horn sounds intermittently and the flashing light SPS (1) flashes.
- AUTOMATIC TELESCOPE RETRACTION option (depending on version): The telescope retracts automatically in less than 4 seconds.
- If you are still trapped between the safety strap SPS and the structure:
  - Press and release the reset button SPS (3).

  Result:
  - The platform controls are unlocked, use them to get free.
  - The horn stops sounding and the flashing light SPS stops flashing when you are no longer trapped.
- If you are no longer trapped between the safety strap SPS and the structure:
  - Press and release the reset button SPS (3).

  Result:
  - The platform controls are unlocked.
  - The horn stops sounding and the flashing light SPS stops flashing.



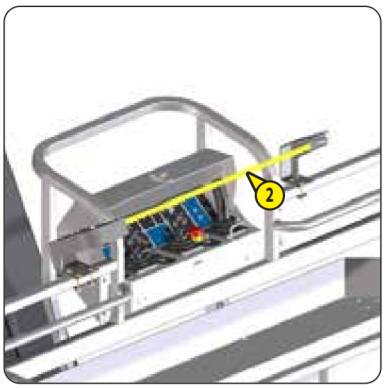



SECONDARY PROTECTION SYSTEM SPS - SECOND VERSION

⚠ IMPORTANT ⚠

Operate the controls extremely carefully during attempts at clearance.

If the audible alarm sounds intermittently and rapidly and the flashing light SPS (1) flashes rapidly: The platform can be used, but the secondary protection system SPS is deactivated; consult the maintenance personnel.

NB: The audible alarm sounds once and the blue flashing light SPS (1) flashes several times when the platform is powered up. This indicates that the secondary protection system SPS is operating correctly.

NB: The flashing light SPS (1) may be blue or red depending on the country.



OPERATION DESCRIPTION

If you are trapped between the safety cable SPS (2) and a structure (A):

- All of the platform controls are stopped and locked.
- The horn sounds intermittently and the flashing light SPS (1) flashes.
- AUTOMATIC TELESCOPE RETRACTION option (depending on version): The telescope retracts automatically in less than 4 seconds.
- If you are still trapped between the safety cable SPS and the structure:
  - Press and release the reset button SPS (3).

  Result:
  - The platform controls are unlocked, use them to get free.
  - The horn stops sounding and the flashing light SPS stops flashing when you are no longer trapped.
- If you are no longer trapped between the safety cable SPS and the structure:
  - Press and release the reset button SPS (3).

  Result:
  - The platform controls are unlocked.
  - The horn stops sounding and the flashing light SPS stops flashing.



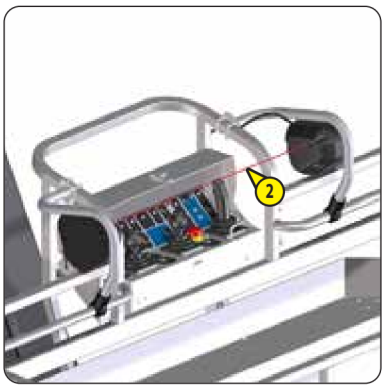



3 - MAINTENANCE

3 - MAINTENANCE

INTRODUCTION 3-3

ORIGINAL MANITOU SPARE PARTS AND EQUIPMENT 3-3

DAILY AND MONTHLY MAINTENANCE 3-4

COMPULSORY SERVICES AND PERIODIC MAINTENANCE 3-5

OCCASIONAL MAINTENANCE AND OCCASIONAL OPERATIONS 3-9

FILTER CARTRIDGES AND BELTS 3-10

LUBRICANTS AND FUEL 3-11

➲ 10H - DAILY MAINTENANCE OR EVERY 10 HOURS OF SERVICE 3-13

➲ 50H - MONTHLY MAINTENANCE OR EVERY 50 HOURS OF SERVICE 3-25

➲ ❶ 250H - PERIODIC MAINTENANCE - EVERY 250 HOURS OF SERVICE OR 6 MONTHS 3-30

➲ ❷ 500H - PERIODIC MAINTENANCE - EVERY 500 HOURS OF SERVICE OR 1 YEAR 3-42

➲ ❸ 1000H - PERIODIC SERVICE - EVERY 1,000 HOURS OF SERVICE OR 2 YEARS 3-54

➲ ❹ 2000H - PERIODIC SERVICE - EVERY 2,000 HOURS OF SERVICE OR 4 YEARS 3-59

➲ ❺ 6000H - PERIODIC SERVICE - EVERY 6,000 HOURS OF SERVICE OR 12 YEARS 3-59

➲ OCCASIONAL MAINTENANCE 3-60

➲ OCCASIONAL OPERATIONS 3-64

647772 (16/09/2020)
260 TJ-XP ST3A S1 / 280 TJ-X ST3A S1

INTRODUCTION

MAINTENANCE OPERATIONS REQUIRE SPECIFIC PRECAUTIONS.

⚠ IMPORTANT ⚠

Unless specific instructions are given, during maintenance operations:
- The platform must be powered down.
- The platform must be on a level surface. The wheels must be chocked.
- The platform must be in transport position, the turntable and the basket must be in neutral position, ◁ 2 - DESCRIPTION: PLATFORM OPERATION: TRANSPORT/ WORKING POSITION.
- The jib must be completely lowered.
- It is essential that the turntable is locked, ◁ 2 - DESCRIPTION: SAFETY COMPONENTS: TURNTABLE LOCKING PIN.
- The basket must be empty.
- If installed, the pipe support must be empty.
- If installed, the panel support must be empty.

ORIGINAL MANITOU SPARE PARTS AND EQUIPMENT

OUR PLATFORMS MUST BE SERVICED USING ORIGINAL MANITOU PARTS.

BY ALLOWING THE USE OF NON ORIGINAL MANITOU PARTS, YOU RISK:

⚠ IMPORTANT ⚠

THE USE OF COUNTERFEIT PARTS OR COMPONENTS NOT APPROVED BY THE MANUFACTURER, MEANS YOU LOSE THE BENEFIT OF THE CONTRACTUAL GUARANTEE.

- Legally, being held responsible in the event of an accident.
- Technically, causing operating malfunctions and reducing the platform's service life.

USING ORIGINAL MANITOU PARTS FOR MAINTENANCE OPERATIONS MEANS THAT YOU BENEFIT FROM OUR KNOW-HOW

Through its network, MANITOU provides the user with,

- Know-how and competence.
- The guarantee of high-quality work.
- Original replacement parts.
- Help with preventive maintenance.
- Efficient help with diagnosis.
- Improvements due to experience feedback.
- Operator training.
- Only the MANITOU network has detailed knowledge of the design of the platform and therefore the best technical ability to provide maintenance.

⚠ IMPORTANT ⚠

ORIGINAL REPLACEMENT PARTS ARE DISTRIBUTED EXCLUSIVELY BY MANITOU AND ITS DEALER NETWORK.
The dealer network list is available on the MANITOU website: www.manitou.com

DAILY AND MONTHLY MAINTENANCE

⚠ IMPORTANT ⚠

DAILY MAINTENANCE MUST BE CARRIED OUT BY THE OPERATOR BEFORE USING THE PLATFORM.
MONTHLY MAINTENANCE MUST BE CARRIED OUT BY THE MAINTENANCE PERSONNEL.

10H - DAILY MAINTENANCE OR EVERY 10 HOURS OF SERVICE

- CHECK — General inspection 3-13
- CHECK — Fuel level 3-13
- CHECK — Battery voltage 3-13
- CHECK — Engine oil level 3-14
- CHECK — Coolant level 3-14
- CHECK — Alternator/fan belt 3-15
- CHECK — Hydraulic oil level 3-15
- CHECK — Platform controls 3-16
- CHECK — Secondary protection system SPS - first version (OPTION) 3-23
- CHECK — Secondary protection system SPS - second version (OPTION) 3-24

50H - MONTHLY MAINTENANCE OR EVERY 50 HOURS OF SERVICE

ALSO PERFORM THE DAILY MAINTENANCE.

- CHECK — Injection pipes, fuel hoses and hose clamps 3-25
- CHECK — Reduction gearbox seal 3-25
- CHECK — Front and rear axle differential seals 3-25
- CHECK — Front and rear wheel reducer seals 3-25
- CHECK — Remote control unit 3-26
- CHECK — Generator (OPTION) 3-27
- CHECK — Condition of pipe support (ATTACHMENT) 3-27
- CHECK — Condition of panel support (ATTACHMENT) 3-27
- CLEAN — Coolant, air and oil radiators 3-27
- CLEAN — Dry air filter cartridge 3-28
- LUBRICATE — Front and rear axles 3-29
- RESET — Maintenance warning 3-29

647772 (16/09/2020)
260 TJ-XP ST3A S1 / 280 TJ-X ST3A S1

COMPULSORY SERVICES AND PERIODIC MAINTENANCE

⚠ IMPORTANT ⚠

THE COMPULSORY SERVICES AND PERIODIC MAINTENANCE MUST BE CARRIED OUT BY AN APPROVED PROFESSIONAL FROM THE MANITOU NETWORK.

MAINTENANCE SCHEDULE

This schedule enables the compulsory services and periodic maintenance on the platform to be kept up to date by reporting the total number of hours worked and the date of the service.

		OR	
DUE	FIRST 50 HOURS	FIRST 6 MONTHS	FIRST 500 HOURS
MANDATORY SERVICE	FIRST 50 HOURS	FIRST 500 HOURS OR 6 MONTHS	FIRST 500 HOURS OR 6 MONTHS +❷
MACHINE COUNTER			
DATE OF SERVICING			

DUE	250 H	500 H or 1 YEAR	750 H	1000 H or 2 YEARS	1250 H
PERIODIC SERVICE	❶	❶+❷	❶	❶+❷+❸	❶
MACHINE COUNTER					
DATE OF SERVICING					

DUE	1500 H or 3 YEARS	1750 H	2000 H or 4 YEARS	2250 H	2500 H or 5 YEARS
PERIODIC SERVICE	❶+❷	❶	❶+❷+❸+❹	❶	❶+❷
MACHINE COUNTER					
DATE OF SERVICING					

DUE	2750 H	3000 H or 6 YEARS	3250 H	3500 H or 7 YEARS	3750 H
PERIODIC SERVICE	❶	❶+❷+❸	❶	❶+❷	❶
MACHINE COUNTER					
DATE OF SERVICING					

DUE	4000 H or 8 YEARS	4250 H	4500 H or 9 YEARS	4750 H	5000 H or 10 YEARS
PERIODIC SERVICE	❶+❷+❸+❹	❶	❶+❷	❶	❶+❷+❸
MACHINE COUNTER					
DATE OF SERVICING					

DUE	5250 H	5500 H or 11 YEARS	5750 H	6000 H or 12 YEARS
PERIODIC SERVICE	❶	❶+❷	❶	❶+❷+❸+❹+❺
MACHINE COUNTER				
DATE OF SERVICING				

647772 (16/09/2020)
260 TJ-XP ST3A S1 / 280 TJ-X ST3A S1

MANDATORY SERVICE - FIRST 50 HOURS

ALSO PERFORM THE MONTHLY MAINTENANCE.

This service must be carried out in the first 50 hours of service.

- CHECK — Wheel nut tightening 3-31
- CHECK — Tightening of the fixing screws for the oscillating cylinders 3-31
- CHECK — Tightening of the fixing screws for the axles 3-32
- CHECK — Tightening of the fixing screws on the basket 3-42
- CHECK — Tightening of the fixing screws on the basket rotation cylinder 3-43
- REPLACE — Engine oil 3-50
  - REPLACE — Engine oil filter 3-50

MANDATORY SERVICE - FIRST 500 HOURS OR 6 MONTHS

This service must be carried out after the first 500 hours of service or within 6 months of commissioning of the platform (whichever occurs first):

FIRST 500 HOURS BEFORE THE FIRST 6 MONTHS

- If the platform has reached the first 500 hours of service before the first 6 months have expired, perform both the mandatory service and periodic 500-hour maintenance (◅ ➲ 2 500H - PERIODIC MAINTENANCE - EVERY 500 HOURS OF SERVICE OR 1 YEAR).

FIRST 6 MONTHS BEFORE THE FIRST 500 HOURS

- If the platform has not completed 500 hours of service in the first 6 months, carry out only the compulsory service.

- CHECK — General inspection 3-13
- CHECK — Platform controls 3-16
- CHECK — Secondary protection system SPS - first version (OPTION) 3-23
- CHECK — Secondary protection system SPS - second version (OPTION) 3-24
- CHECK — Injection pipes, fuel hoses and hose clamps 3-25
- CHECK — Reduction gearbox seal 3-25
- CHECK — Front and rear axle differential seals 3-25
- CHECK — Front and rear wheel reducer seals 3-25
- CHECK — Remote control unit 3-26
- CHECK — Generator (OPTION) 3-27
- CHECK — Condition of pipe support (ATTACHMENT) 3-27
- CHECK — Condition of panel support (ATTACHMENT) 3-27
- CLEAN — Coolant, air and oil radiators 3-27
- CLEAN — Dry air filter cartridge 3-28
- LUBRICATE — Front and rear axles 3-29
- CHECK — Remote control unit 3-30
- CHECK — Alternator/fan belt 3-31
- CHECK — Wheel nut tightening 3-31
- CHECK — Tightening of the fixing screws for the oscillating cylinders 3-31
- CHECK — Tightening of the transmission shaft fixing screws 3-31
- CHECK — Tightening of the fixing screws for the axles 3-32
- CHECK — Locking of the front axle oscillating cylinders 3-33
- CHECK — Overload alarm (260 TJ-XP ST3A S1) 3-34
- CHECK — Overload alarm (280 TJ-X ST3A S1) 3-34
- CHECK — Braking 3-35
- CHECK — Turntable rotation motor oil level 3-36
- CHECK — Emergency controls 3-36
- CLEAN — Fuel filter cartridge 3-37
- LUBRICATE — Shafts, hubs and cylinder rings 3-38
- LUBRICATE — Telescope 3-40
- LUBRICATE — Jib telescope (only for 280 TJ-X ST3A S1) 3-40
- LUBRICATE — Crown gear 3-41
- CHECK — Tightening of the fixing screws on the basket 3-42
- CHECK — Tightening of the fixing screws on the basket rotation cylinder 3-43
- CHECK — Tightening of the fixing screws on the telescope cylinder 3-43
- CHECK — Jib telescope chocking (only for 280 TJ-X ST3A S1) 3-44
- CHECK — Telescope setting 3-45
- CHECK — Tightening of the fixing screws for the crown gear 3-46

- CHECK Tightening of the fixing screws on the turntable rotation motor 3-46
- CHECK Tightening of the cast iron counterweight fixing screws 3-47
- CHECK Tightening of the concrete counterweight fixing screws 3-47
- CHECK Tightening of the fixing screws for the lifting points (depending on version) 3-47
- CHECK Hydraulic hoses 3-48
- CHECK Engine silent blocks * 3-58
- CHECK Engine speeds * 3-58
- CHECK Valve lash * 3-58
- CHECK Injectors * 3-58
- CHECK Hydrostatic transmission circuit pressure * 3-58
- CHECK Crown gear clearance * 3-58
- CHECK Condition of telescope cables * 3-58
- CHECK Speeds of hydraulic movements * 3-58
- CHECK Condition of cylinders * 3-58
- CHECK Condition of electric wiring * 3-58

**** Contact your dealer.***

1 250H - PERIODIC MAINTENANCE - EVERY 250 HOURS OF SERVICE OR 6 MONTHS

ALSO PERFORM THE DAILY MAINTENANCE.

- CHECK Injection pipes, fuel hoses and hose clamps 3-30
- CHECK Reduction gearbox seal 3-30
- CHECK Front and rear axle differential seals 3-30
- CHECK Front and rear wheel reducer seals 3-30
- CHECK Remote control unit 3-30
- CHECK Generator (OPTION) 3-30
- CHECK Condition of pipe support (ATTACHMENT) 3-30
- CHECK Condition of panel support (ATTACHMENT) 3-30
- CHECK Alternator/fan belt 3-31
- CHECK Wheel nut tightening 3-31
- CHECK Tightening of the fixing screws for the oscillating cylinders 3-31
- CHECK Tightening of the transmission shaft fixing screws 3-31
- CHECK Tightening of the fixing screws for the axles 3-32
- CHECK Locking of the front axle oscillating cylinders 3-33
- CHECK Overload alarm (260 TJ-XP ST3A S1) 3-34
- CHECK Overload alarm (280 TJ-X ST3A S1) 3-34
- CHECK Braking 3-35
- CHECK Turntable rotation motor oil level 3-36
- CHECK Emergency controls 3-36
- CLEAN Fuel filter cartridge 3-37
- LUBRICATE Shafts, hubs and cylinder rings 3-38
- LUBRICATE Telescope 3-40
- LUBRICATE Jib telescope (only for 280 TJ-X ST3A S1) 3-40
- LUBRICATE Crown gear 3-41
- RESET Maintenance warning 3-41

➲ ❷ 500H - PERIODIC MAINTENANCE - EVERY 500 HOURS OF SERVICE OR 1 YEAR

ALSO PERFORM THE DAILY SERVICE AND THE PERIODIC SERVICE AT 250 HOURS OF SERVICE.

- CHECK — Tightening of the fixing screws on the basket 3-42
- CHECK — Tightening of the fixing screws on the basket rotation cylinder 3-43
- CHECK — Tightening of the fixing screws on the telescope cylinder 3-43
- CHECK — Jib telescope chocking (only for 280 TJ-X ST3A S1) 3-44
- CHECK — Telescope setting 3-45
- CHECK — Tightening of the fixing screws for the crown gear 3-46
- CHECK — Tightening of the fixing screws on the turntable rotation motor 3-46
- CHECK — Tightening of the cast iron counterweight fixing screws 3-47
- CHECK — Tightening of the concrete counterweight fixing screws 3-47
- CHECK — Tightening of the fixing screws for the lifting points (depending on version) 3-47
- CHECK — Hydraulic hoses 3-48
- REPLACE — Alternator/fan belt 3-48
- REPLACE — Fuel pre-filter 3-49
- REPLACE — Fuel filter cartridge 3-49
- REPLACE — Engine oil 3-50
  - REPLACE — Engine oil filter 3-50
- REPLACE — Dry air filter cartridge 3-51
- REPLACE — Turntable rotation motor oil 3-52
- REPLACE — Hydraulic pressure filter cartridge 3-52
- REPLACE — Hydrostatic transmission filter cartridge 3-53
- RESET — Maintenance warning 3-53

➲ ❸ 1000H - PERIODIC SERVICE - EVERY 1,000 HOURS OF SERVICE OR 2 YEARS

ALSO PERFORM THE DAILY SERVICE AND THE PERIODIC SERVICES AT 250 HOURS AND 500 HOURS OF SERVICE.

- CLEAN — Fuel tank 3-54
- REPLACE — Dry air filter safety cartridge 3-54
- REPLACE — Coolant 3-55
- REPLACE — Reduction gearbox oil 3-55
- REPLACE — Front and rear axle differential oil 3-56
- REPLACE — Front and rear wheel reduction gear oil 3-56
- REPLACE — Hydraulic oil 3-57
  - CLEAN — Filling filter and suction strainer 3-57
- CHECK — Engine silent blocks * 3-58
- CHECK — Engine speeds * 3-58
- CHECK — Valve lash * 3-58
- CHECK — Injectors * 3-58
- CHECK — Hydrostatic transmission circuit pressure * 3-58
- CHECK — Crown gear clearance * 3-58
- CHECK — Condition of telescope cables * 3-58
- CHECK — Speeds of hydraulic movements * 3-58
- CHECK — Condition of cylinders * 3-58
- CHECK — Condition of electric wiring * 3-58
- REPLACE — Air intake line and air suction hose * 3-58
- REPLACE — Hoses and hose clamps for the coolant radiator * 3-58
- REPLACE — Injection pipes, fuel hoses and hose clamps * 3-58
- RESET — Maintenance warning 3-58

**** Contact your dealer.***

4 2000H - PERIODIC SERVICE - EVERY 2,000 HOURS OF SERVICE OR 4 YEARS

ALSO PERFORM THE DAILY SERVICE AND THE PERIODIC SERVICES AT 250 HOURS, 500 HOURS AND 1,000 HOURS OF SERVICE.

- CHECK — Coolant, air and oil radiators * 3-59
- CHECK — Water pump and thermostat * 3-59
- CHECK — Injection pump * 3-59
- CHECK — Alternator and starter * 3-59
- CHECK — Turbocharger * 3-59
- CHECK — Hydraulic circuit pressures * 3-59
- CHECK — Hydraulic circuit flow rates * 3-59
- CLEAN — Hydraulic oil tank * 3-59
- RESET — Maintenance warning 3-59

** Contact your dealer.*

5 6000H - PERIODIC SERVICE - EVERY 6,000 HOURS OF SERVICE OR 12 YEARS

- REPLACE — Telescope cables 3-59

OCCASIONAL MAINTENANCE AND OCCASIONAL OPERATIONS

⚠ IMPORTANT ⚠

OCCASIONAL MAINTENANCE AND OCCASIONAL OPERATIONS MUST BE PERFORMED BY MAINTENANCE PERSONNEL OR AN APPROVED PROFESSIONAL FROM THE MANITOU NETWORK.

OCCASIONAL MAINTENANCE

- REPLACE — Wheels 3-60
- BLEED — Fuel supply circuit 3-61
- REPLACE — Fuses/relays 3-62

OCCASIONAL OPERATIONS

- USE — Swivelling engine plate 3-64
- WINCH — Platform 3-65
- LIFT — Platform 3-67
- TRANSPORT — Platform 3-72

647772 (16/09/2020)
260 TJ-XP ST3A S1 / 280 TJ-X ST3A S1

FILTER CARTRIDGES AND BELTS

➲ ❷ 500H - PERIODIC MAINTENANCE - EVERY 500 HOURS OF SERVICE OR 1 YEAR



ENGINE OIL FILTER

Part number: 749613



ALTERNATOR/FAN BELT

Part number: 746365

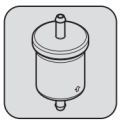

FUEL PRE-FILTER

Part number: 734146



HYDROSTATIC TRANSMISSION FILTER CARTRIDGE

Part number: 518251



DRY AIR FILTER CARTRIDGE

Part number: 227959



FUEL FILTER CARTRIDGE

Part number: 781909



PRESSURE HYDRAULIC FILTER CARTRIDGE

Part number: 518251

➲ ❸ 1000H - PERIODIC SERVICE - EVERY 1,000 HOURS OF SERVICE OR 2 YEARS

ALSO ADD FILTER CARTRIDGES AND BELTS FOR PERIODIC MAINTENANCE AFTER 500 HOURS OF SERVICE.

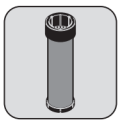

SAFETY DRY AIR FILTER CARTRIDGE

Part number: 227960

➲ OCCASIONAL MAINTENANCE



CAP/HYDRAULIC OIL TANK FILTER

Part number: 832750



HYDRAULIC OIL TANK SUCTION STRAINER

Part number: 19910

⚠ IMPORTANT ⚠

USE THE RECOMMENDED LUBRICANTS AND FUEL:
- For topping up, oils may not be miscible.
- For oil changes, MANITOU oils are perfectly appropriate.

DIAGNOSTIC ANALYSIS OF OILS

If a service or maintenance contract has been set up with the dealer, a diagnostic analysis of the engine, transmission and axle oils may be requested depending on the rate of use.

(*) SPECIFICATIONS OF RECOMMENDED FUEL

Use a high-quality fuel to obtain optimal performance of the engine.

- EN590 diesel fuel (sulphur content < 10 ppm)
- ASTM D975 diesel fuel (sulphur content < 15 ppm)

RECOMMENDATION

ENGINE

DESCRIPTION	CAPACITY	RECOMMENDATION
ENGINE OIL	9.5 L	10W30 / 10W40 / MANITOU OIL 15W40 API CH4
COOLING CIRCUIT	9 L	COOLANT -35 °C
FUEL TANK	72 L	DIESEL OIL GNR HP *

HYDRAULIC

DESCRIPTION	CAPACITY	RECOMMENDATION
HYDRAULIC OIL TANK	94 L	ISO VG 100 / ISO VG 68 / MANITOU HYDRAULIC OIL ISO VG 46 / ISO VG 37 / ISO VG 32

TRANSMISSION

DESCRIPTION	CAPACITY	RECOMMENDATION
REDUCTION GEARBOX	0.8 L	MANITOU MECHANICAL TRANSMISSION OIL SAE80W90

FRONT AXLE

DESCRIPTION	CAPACITY	RECOMMENDATION
DIFFERENTIAL	7.5 L	SPECIAL MANITOU OIL FOR IMMERSED BRAKES
WHEEL GEAR REDUCER	2 x 0.8 L	MANITOU MECHANICAL TRANSMISSION OIL SAE80W90
STEERING PIVOT PINS		MANITOU BLACK MULTI-PURPOSE LUBRICANT
OSCILLATION BEARINGS		MANITOU BLACK MULTI-PURPOSE LUBRICANT

647772 (16/09/2020)
260 TJ-XP ST3A S1 / 280 TJ-X ST3A S1

REAR AXLE		
DESCRIPTION	CAPACITY	RECOMMENDATION
		-40 °C -30 °C -20 °C -10 °C 0 °C 10 °C 20 °C 30 °C 40 °C 50 °C
DIFFERENTIAL	7.5 L	SPECIAL MANITOU OIL FOR IMMERSED BRAKES
		-40 °C -30 °C -20 °C -10 °C 0 °C 10 °C 20 °C 30 °C 40 °C 50 °C
WHEEL GEAR REDUCER	2 x 0.8 L	MANITOU MECHANICAL TRANSMISSION OIL SAE80W90
		-40 °C -30 °C -20 °C -10 °C 0 °C 10 °C 20 °C 30 °C 40 °C 50 °C
STEERING PIVOT PINS		MANITOU BLACK MULTI-PURPOSE LUBRICANT

LIFTING STRUCTURE		
DESCRIPTION	CAPACITY	RECOMMENDATION
		-40 °C -30 °C -20 °C -10 °C 0 °C 10 °C 20 °C 30 °C 40 °C 50 °C
GENERAL GREASING		MANITOU BLACK MULTI-PURPOSE LUBRICANT
		-40 °C -30 °C -20 °C -10 °C 0 °C 10 °C 20 °C 30 °C 40 °C 50 °C
TELESCOPE LUBRICATION LUBRICATION OF THE JIB TELESCOPE (280 TJ-X ST3A S1)		MANITOU BLACK MULTI-PURPOSE LUBRICANT
		-40 °C -30 °C -20 °C -10 °C 0 °C 10 °C 20 °C 30 °C 40 °C 50 °C
CROWN GEAR BEARINGS		MANITOU BLACK MULTI-PURPOSE LUBRICANT
		-40 °C -30 °C -20 °C -10 °C 0 °C 10 °C 20 °C 30 °C 40 °C 50 °C
CROWN GEAR TEETH		MANITOU MULTI-PURPOSE EXTREME PRESSURE LUBRICANT
		-40 °C -30 °C -20 °C -10 °C 0 °C 10 °C 20 °C 30 °C 40 °C 50 °C
TURNTABLE ROTATION MOTOR	3 L	MANITOU MECHANICAL TRANSMISSION OIL SAE80W90

CONDITIONING

OIL						
PRODUCT	PACKAGING / PART NO.					
	1 LITRE	2 LITRES	5 LITRES	20 LITRES	55 LITRES	209 LITRES
- MANITOU OIL 15W40 API CH4			661706	582357	582358	582359
- MANITOU HYDRAULIC OIL ISO VG 46			545500	582297	546108	546109
- SPECIAL MANITOU OIL FOR IMMERSED BRAKES			545976	582391		894257
- MANITOU MECHANICAL TRANSMISSION OIL SAE80W90		499237	720184	546330	546221	546220

GREASE						
PRODUCT	PACKAGING / PART NO.					
	400 ML	400 GR	1 KG	5 KG	20 KG	50 KG
- MANITOU MULTI-PURPOSE EXTREME PRESSURE LUBRICANT	947765					
- MANITOU BLACK MULTI-PURPOSE LUBRICANT		947766	161590			499235

LIQUID						
PRODUCT	PACKAGING / PART NO.					
	1 LITRE	2 LITRES	5 LITRES	20 LITRES	55 LITRES	210 LITRES
- COOLANT -35 °C			894967	894968		894969

647772 (16/09/2020)
260 TJ-XP ST3A S1 / 280 TJ-X ST3A S1

➲ 10H - DAILY MAINTENANCE OR EVERY 10 HOURS OF SERVICE

CHECK — General inspection

⚠ IMPORTANT ⚠

Consult the maintenance personnel if there is doubt about the condition of the platform.

NB: The turntable covers must be opened to carry out the general inspection of the platform. They must be closed once finished.

The operator must perform a visual and physical inspection of the platform:

- Check that the instructions for use are clean and complete.
- Check the stickers and make sure they are all present, clean and legible, ◅ 2 - DESCRIPTION: STICKERS.
- Check for the absence of leaks: fuel, engine oil, coolant, battery liquid, hydraulic oil, lubricants, etc.
- Check the condition of the structure: absence of impacts, damage, cracked welding, corrosion, excessive mechanical play, wear, etc.
- Check the condition of the basket: structure, floor, safety rail, harness attachment points, etc.
- Check the condition of the hydraulic components: pumps, distributors, valves, motors, cylinders, hoses, etc.
- Check the condition of the mechanical components: wheels, tyres, tie rods, crown gear, shafts, etc.
- Check the condition of the electrical components: control panels, pedal switch, control handles, switches, buttons, indicator lights, battery, fuses, cables, harnesses, rotating beacon light, etc.
- Check the condition of covers, handles, locks, plugs, etc.
- Check there are no parts missing or loose: screws, nuts, pins, etc.
- Check that no parts are missing or have had unauthorised modifications.
- Check the general cleanliness of the platform: basket floor, motor compartment, etc.

CHECK — Fuel level

CHECK — Battery voltage



⚠ IMPORTANT ⚠

Never smoke or approach with a flame when filling with fuel or when the tank cap has been removed.
Never fill up with fuel while engine is running.
If there is doubt about the battery voltage, refer to the maintenance personnel.

- Switch on the platform.
- Check the fuel level displayed on the interface screen.
- If the level is low:
  - Open the flap (1).
  - Remove the cap from the tank (2).
  - Add fuel until the maximum level is reached, ◅ LUBRICANTS AND FUEL.
  - Refit the tank cap and close the flap.
- If the level is correct:
  - Ensure that the tank cap (2) and the flap (1) are correctly closed.
- Check the battery voltage displayed on the interface screen. Refer to the maintenance personnel if the voltage is low.
- Switch off the power to the platform.

647772 (16/09/2020)
260 TJ-XP ST3A S1 / 280 TJ-X ST3A S1

CHECK — Engine oil level

- Open the left-hand turntable cover.
- Remove the dipstick (1). Clean it with a clean cloth and put it back in place.
- Remove the dipstick. The level is correct when the engine oil is between the 2 marks (A) and (B).
- If the level is low:
  - Put the dipstick back in place.
  - Remove the filler plug (2).
  - Add engine oil, ◁ LUBRICANTS AND FUEL.
  - Refit the filler cap.
  - Wait 5 minutes for the oil to settle in the crankcase.
  - Remove the dipstick. Clean it with a clean cloth and put it back in place.
  - Remove the dipstick. The level is correct when the engine oil is between the 2 marks (A) and (B).
  - Put the dipstick back in place.
- If the level is correct:
  - Put the dipstick back in place.
  - Ensure that the filler cap (2) is correctly closed.



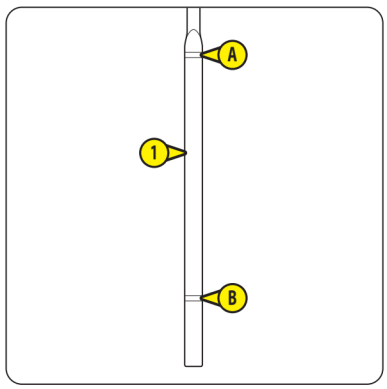



CHECK — Coolant level

⚠ IMPORTANT ⚠

Wait until the engine cools if it has been running for a while.
Do not remove the radiator cap until the engine is completely cooled.

NB: The left turntable cover is open.

- Remove the radiator plug (1). The level is correct when the coolant reaches the top of the filling hole.
- If the level is low, add coolant until the correct level is reached, ◁ LUBRICANTS AND FUEL.
- Refit the radiator cap.



647772 (16/09/2020)
260 TJ-XP ST3A S1 / 280 TJ-X ST3A S1

CHECK — Alternator/fan belt

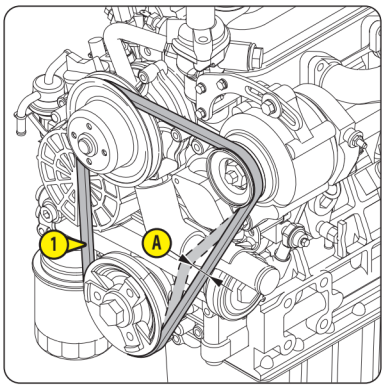

⚠ IMPORTANT ⚠

If there is doubt about the condition of the belt, refer to the maintenance personnel.

NB: The left turntable cover is open.

- Check the condition of the belt (1). Ensure there are no cracks or signs of wear.
- Check the belt tension between the crankshaft pulley and the alternator pulley:
  - Apply pressure with the thumb = 98 N. The clearance (A) must be between 7 mm and 9 mm to be correct.
- Adjust if necessary:
  - Refer to the maintenance personnel.
- Close the left-hand turntable cover.

CHECK — Hydraulic oil level



⚠ IMPORTANT ⚠

The platform must be in transport position with the jib lowered completely.
There can be a difference in level of 10 mm to 20 mm between hot and cold oil. It is recommended the level is checked again when the hydraulic oil is hot.
Clean the oil can before adding oil to the hydraulic oil tank.
Use a clean funnel to add oil to the hydraulic oil tank.

- Open the right-hand turntable cover.
- Locate the level indicator (1). The level is correct when the oil reaches the red dot on the level indicator.
- If the level is low:
  - Remove the cap from the tank (2).
  - Add hydraulic oil until the correct level is reached, ◁ LUBRICANTS AND FUEL.
  - Refit the tank cap.
- If the level is correct:
  - Ensure that the tank cap (2) is correctly closed.
- Close the right-hand turntable cover panel.

647772 (16/09/2020)
260 TJ-XP ST3A S1 / 280 TJ-X ST3A S1

⚠ IMPORTANT ⚠

◁ 2 - DESCRIPTION for more information on the control panels on the ground and in the basket.
Select a test area on a firm, level surface that is free of any obstacles.
Look around and above you when manoeuvring the platform (lifting, rotation, etc.).
Pay particular attention to electric lines and any object that may be within the platform's field of operation.
Shut the platform down if a malfunction is detected.

STARTING THE ENGINE AND EMERGENCY STOP

GROUND LEVEL CONTROL PANEL:

- Switch on the platform.

Result:

- The start-up page, then the preheat page should be displayed on the user interface screen.
- The audible alarm should sound once.

- Wait for the preheat cycle to finish and start up the engine.

Result:

- The engine should start.

- Press the emergency stop button.

Result:

- The emergency stop button should be locked in the OFF position.
- The engine should stop.
- It should not be possible to activate the controls.

- Turn the emergency stop button a quarter turn to the right and release it.

Result:

- The emergency stop button should be unlocked (in the ON position).
- The start-up page, then the preheat page should be displayed on the user interface screen.

- Wait for the preheat cycle to finish and start up the engine.

Result:

- The engine should start.

CONTROL PANEL IN THE BASKET:

- Turn the basket to the right or left, at the same time pressing the emergency stop button.

Result:

- The emergency stop button should be locked in the OFF position.
- The basket rotation should stop.
- The engine should stop.
- It should not be possible to activate the controls.

- Turn the emergency stop button a quarter turn to the right and release it.

Result:

- The emergency stop button should be unlocked (in the ON position).
- The preheat light should light up.

- Wait for the preheat cycle to finish and start up the engine.

Result:

- The engine should start.

HORN

NB: The engine has been started.

CONTROL PANEL IN THE BASKET:

- Press horn button and release it.

Result:

- The horn should sound.

647772 (16/09/2020)
260 TJ-XP ST3A S1 / 280 TJ-X ST3A S1

OVERLOAD ALARM (260 TJ-XP ST3A S1)

NB: The engine has been started.

CONTROL PANEL ON THE GROUND AND IN THE BASKET:

- Place a uniformly distributed weight in the basket:
  - Pipe support or panel support not installed = between 440 kg and 470 kg.
  - Pipe support installed = 425 kg and 455 kg.
  - Panel support installed = 430 kg and 460 kg.

  Result:
  - The overload alarm should go off.
- Try to operate the platform controls from the ground control panel and then from the control panel in the basket.

  Result:
  - It should not be possible to activate the controls.
- Remove the entire load from the basket.

  Result:
  - The overload alarm should stop.

OVERLOAD ALARM (280 TJ-X ST3A S1)

NB: The engine has been started.

CONTROL PANEL ON THE GROUND AND IN THE BASKET:

- Place a uniformly distributed weight in the basket:
  - Pipe support or panel support not installed = 385 kg and 415 kg.
  - Pipe support installed = between 370 kg and 400 kg.
  - Panel support installed = between 375 kg and 405 kg.

Result:

- The overload alarm should go off.

- Try to operate the platform controls from the ground control panel and then from the control panel in the basket.

Result:

- It should not be possible to activate the controls.

- Remove the entire load from the basket.

Result:

- The overload alarm should stop.

- Enter the basket.

Result:

- The restricted capacity warning light must be off.

- Raise the jib to the horizontal position.
- Fully extend the jib telescope.
- Fully extend the telescope.

Result:

- The restricted capacity warning light should flash.

- Lower the jib.
- Get out of the basket.
- Place a uniformly distributed weight in the basket:
  - Pipe support or panel support not installed = between 264 kg and 294 kg less your own weight.
  - Pipe support installed = between 249 kg and 279 kg less your own weight.
  - Panel support installed = between 254 kg and 284 kg less your own weight.
- Enter the basket.

Result:

- The overload alarm should go off.
- The restricted capacity warning light should come on.

- Try to operate the platform controls from the control panel in the basket.

Result:

- It should not be possible to activate the controls.

- Get out of the basket.

Result:

- The overload alarm should stop.

- Retract the telescope for 10 seconds from the ground level control panel.
- Enter the basket.

Result:

- The restricted capacity warning light should remain on.

- Extend the telescope.

Result:

- The telescope should not extend completely.

- Lower the jib.
- Get out of the basket.
- Remove the entire load from the basket.
- Fully retract the jib telescope.
- Fully retract the telescope.
- Fully lower the jib.

CONTROLS: BASKET/JIB TILT

NB: The engine has been started.

GROUND LEVEL CONTROL PANEL:

- Do not touch the selector switch on the controls at ground level/in the basket. Test the basket/jib tilt controls up and down one after the other.

Result:

• It should not be possible to activate the controls.

- Push and hold the ground/basket control selection switch to the right .
- Raise the jib slightly.
- Test the basket/jib tilt controls up and down one after the other.

Result:

• It should be possible to activate the controls.

- Level the basket/jib.
- Fully lower the jib.

CONTROLS: BASKET TILT (280 TJ-X ST3A S1)

NB: The engine has been started.

CONTROL PANEL IN THE BASKET:

- Do not touch the foot switch. Test the basket tilt controls up and down one after the other.

Result:

• It should not be possible to activate the controls.

- Press and hold down the foot switch.
- Raise the jib slightly.
- Test the basket tilt controls up and down one after the other.

Result:

• It should be possible to activate the controls.

- Press and hold down the foot switch.
- Extend the telescope for 3 seconds.

Result:

• It should be possible to activate the control.

- Press and hold down the foot switch.
- Test the basket tilt controls up and down one after the other.

Result:

• It should not be possible to activate the controls.

- Fully retract the telescope.
- Level the basket.
- Fully lower the jib.

CONTROLS: ROTATION OF TURNTABLE, MAIN ARM, X-Y FUNCTIONS, TELESCOPE, JIB, JIB TELESCOPE (280 TJ-X ST3A S1) AND BASKET ROTATION

NB: The engine has been started.

GROUND LEVEL CONTROL PANEL:

- Do not touch the selector switch on the controls at ground level/in the basket. Test the controls one by one.

Result:

• It should not be possible to activate any of the controls.

- Push and hold the ground/basket control selection switch to the right . Test the controls one by one.

Result:

• It should be possible to activate all the controls.

- Place the platform in the transport position. Put the turntable and basket in neutral position. Fully lower the jib.

CONTROL PANEL IN THE BASKET:

- Do not touch the foot switch. Test the controls one by one.

Result:

• It should not be possible to activate any of the controls.

- Press and hold down the foot switch. Test the controls one by one.

Result:

• It should be possible to activate all the controls.

- Place the platform in the transport position. Put the turntable and basket in neutral position.

CONTROLS: DRIVING/BRAKING/STEERING (TRANSPORT POSITION)

NB: The engine has been started.

CONTROL PANEL IN THE BASKET:

- Raise the jib slightly for good visibility.
- Select TORTOISE speed .
- Do not touch the foot switch. Do not touch the control handle trigger. Try to drive and steer the platform.
- Do not touch the foot switch. Press and hold down the control handle trigger. Try to drive and steer the platform.
- Press and hold down the foot switch. Do not touch the control handle trigger. Try to drive and steer the platform.

Result:

• It should not be possible to activate the controls.

- Press and hold down the foot switch. Press and hold down the control handle trigger.
- Drive the platform forward, steer left/right and brake. Reverse the platform and brake.
- Select RAMP speed  and perform the test again.
- Select HARE speed  and perform the test again.

Result:

• Driving and steering should function properly.

• Brakes should function properly.

- Test 4-WHEEL, 2-WHEEL and CRAB steering modes, at TORTOISE speed .

Result:

• The steering modes should function properly.

• The wheel alignment indicator lights should function properly.

TURNTABLE ORIENTATION MORE THAN 90° INDICATOR LIGHT

NB: The engine has been started. TORTOISE speed  is selected.

- Turn the turntable to the left more than 90° relative to the neutral position.

Result:

• The light indicating turntable orientation of more than 90° should be lit.

- Turn the turntable to the right more than 90° relative to the neutral position.

Result:

• The light indicating turntable orientation of more than 90° should be lit.

- Put the turntable in neutral position.

MAIN ARM AND TELESCOPE POSITION SENSORS

NB: The engine has been started.

CONTROL PANEL IN THE BASKET:

- Select TORTOISE speed .
- Drive the platform forward for a short distance. Assess and remember the speed of the platform.
- Raise the main arm for 3 seconds.
- Drive the platform forward for a short distance.

Result:

• The driving speed must be WORKING POSITION speed. Assess and remember the speed of the platform.

- Fully lower the main arm.
- Drive the platform forward for a short distance.

Result:

• The driving speed must be TORTOISE speed .

- Extend the telescope for 3 seconds.
- Drive the platform forward for a short distance.

Result:

• The driving speed must be WORKING POSITION speed.

- Fully retract the telescope.
- Drive the platform forward for a short distance.

Result:

• The driving speed must be TORTOISE speed .

TILT ALARM



NB: The engine has been started.

GROUND LEVEL CONTROL PANEL:

- Open the right-hand turntable cover.
- Locate the levelling sensor (1).
- Press the levelling sensor so that it is tilted and hold it down.

Result:

- The tilt alarm should go off.
- The indicator light should go out.

- Release the levelling sensor.

Result:

- The tilt alarm should stop.
- The indicator light should come on.

- Close the right-hand turntable cover panel.

CONTROL PANEL IN THE BASKET:

- Raise the main arm for 3 seconds.
- Select RAMP speed .
- Select a slope between 15% (8.5°) and 25% (14°).
- Drive the platform forwards slowly on the slope, facing it, with the basket at the bottom of the slope.

Result:

- The platform should brake automatically.
- The tilt alarm should go off.

- 260 TJ-XP ST3A S1: Try to raise the main arm, extend the telescope and drive/operate.
- 280 TJ-X ST3A S1: Try to raise the main arm, extend the telescope, extend the jib telescope, tilt the basket upwards/downwards and drive/steer.

Result:

- It should not be possible to activate the controls.

- Fully lower the main arm.

Result:

- It should be possible to activate the control.

- Drive the platform off the slope to a level surface.

Result:

- The tilt alarm should stop.

- Stop the engine. Switch off the power to the platform.

647772 (16/09/2020)
260 TJ-XP ST3A S1 / 280 TJ-X ST3A S1

⚠ IMPORTANT ⚠

Select a test area on a firm, level surface that is free of any obstacles.
Shut the platform down if a malfunction is detected.

NB: The flashing light SPS (1) may be blue or red depending on the country.

- Switch on the platform.

Result:

- The audible alarm should sound once.
- The flashing light SPS (1) should flash several times and stop.

NB: If the audible alarm sounds intermittently and the flashing light SPS (1) flashes rapidly: The platform can function normally but the option is deactivated, consult maintenance personnel.

- Switch on the engine.
- Enter the basket.
- Check the condition of the safety strap SPS (2). If there is doubt about its condition, have it replaced by an approved professional from the Manitou network.
- Extend the telescope for 5 seconds.
- Turn the basket to the right or the left. At the same time, push the safety strap SPS (2) forwards and release.

Result:

- The basket rotation should stop.
- The horn should sound intermittently and the flashing light SPS should flash.
- It should not be possible to activate the controls.
- AUTOMATIC TELESCOPE RETRACTION option (depending on version): The telescope should retract automatically in less than 4 seconds.

- Press and release the reset button SPS (3).

Result:

- The horn should stop sounding and the flashing light SPS should stop flashing.
- It should be possible to activate the controls.

- Extend the telescope for 5 seconds.
- Turn the basket to the right or the left. At the same time, push and hold the safety strap SPS (2) forwards.

Result:

- The basket rotation should stop.
- The horn should sound intermittently and the flashing light SPS should flash.
- It should not be possible to activate the controls.
- AUTOMATIC TELESCOPE RETRACTION option (depending on version): The telescope should retract automatically in less than 4 seconds.

- Press and release the reset button SPS (3) without releasing the safety strap SPS (2).

Result:

- The horn and the flashing light SPS should continue to operate.
- It should be possible to activate the controls.

- Release the safety strap SPS.

Result:

- The horn should stop sounding and the flashing light SPS should stop flashing.

- Place the platform in the transport position. Put the turntable and basket in neutral position. Fully lower the jib.
- Get out of the basket.
- Stop the engine. Switch off the power to the platform.



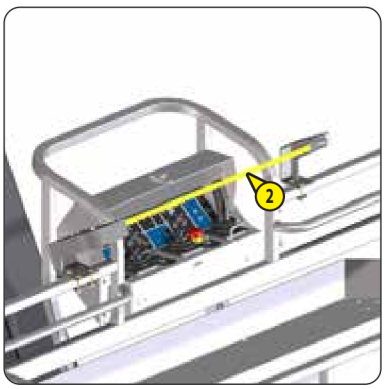



647772 (16/09/2020)
260 TJ-XP ST3A S1 / 280 TJ-X ST3A S1

⚠ IMPORTANT ⚠

Select a test area on a firm, level surface that is free of any obstacles.
Shut the platform down if a malfunction is detected.

NB: The flashing light SPS (1) may be blue or red depending on the country.

- Switch on the platform.

Result:

- The audible alarm should sound once.
- The flashing light SPS (1) should flash several times and stop.

NB: If the audible alarm sounds intermittently and the flashing light SPS (1) flashes rapidly: The platform can function normally but the option is deactivated, consult maintenance personnel.

- Switch on the engine.
- Enter the basket.
- Check the condition of the safety cable SPS (2). If there is doubt about its condition, have it replaced by an approved professional from the Manitou network.
- Extend the telescope for 5 seconds.
- Turn the basket to the right or the left. At the same time, push the safety cable SPS (2) forwards and release.

Result:

- The basket rotation should stop.
- The horn should sound intermittently and the flashing light SPS should flash.
- It should not be possible to activate the controls.
- AUTOMATIC TELESCOPE RETRACTION option (depending on version): The telescope should retract automatically in less than 4 seconds.

- Press and release the reset button SPS (3).

Result:

- The horn should stop sounding and the flashing light SPS should stop flashing.
- It should be possible to activate the controls.

- Extend the telescope for 5 seconds.
- Turn the basket to the right or the left. At the same time, push and hold the safety cable SPS (2) forwards.

Result:

- The basket rotation should stop.
- The horn should sound intermittently and the flashing light SPS should flash.
- It should not be possible to activate the controls.
- AUTOMATIC TELESCOPE RETRACTION option (depending on version): The telescope should retract automatically in less than 4 seconds.

- Press and release the reset button SPS (3) without releasing the safety cable SPS (2).

Result:

- The horn and the flashing light SPS should continue to operate.
- It should be possible to activate the controls.

- Release the safety cable SPS.

Result:

- The horn should stop sounding and the flashing light SPS should stop flashing.

- Place the platform in the transport position. Put the turntable and basket in neutral position. Fully lower the jib.
- Get out of the basket.
- Stop the engine. Switch off the power to the platform.



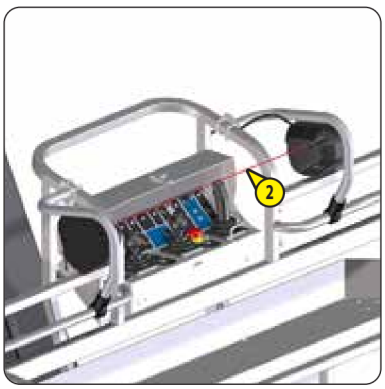



➲ 50H - MONTHLY MAINTENANCE OR EVERY 50 HOURS OF SERVICE

ALSO PERFORM THE DAILY MAINTENANCE.

CHECK — Injection pipes, fuel hoses and hose clamps

⚠ IMPORTANT ⚠

Never smoke or approach with a flame during this check.

If there is doubt about the condition of the injection pipes, fuel hoses and hose clamps, have them replaced by an authorised professional from the Manitou network.

- Open the left-hand turntable cover.
- Open the swivelling engine plate, ◅ OCCASIONAL OPERATION.
- Check the condition of all the injection pipes, fuel hoses and hose clamps.
- Check for fuel leaks.
- Close the swivelling engine plate, ◅ OCCASIONAL OPERATION.
- Close the left-hand turntable cover.

CHECK — Reduction gearbox seal

- Locate the reduction gearbox (1) on the rear axle.
- Check no oil is leaking from the reduction gearbox and plugs.
- If a leak is detected:
  - Clean the outside of the reduction gearbox with a clean cloth.
  - Remove the filler plug (2).

  NB: 2 filler caps (left and right sides).
  - Check that the oil reaches the filling hole.
  - Add oil if necessary, ◅ LUBRICANTS AND FUEL.
  - Refit the filler cap.

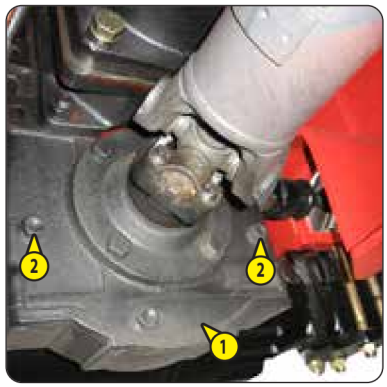

CHECK — Front and rear axle differential seals

- Check no oil is leaking from the differentials and plugs.
- If a leak is detected:
  - Clean the outside of the axle differential with a clean cloth.
  - Remove the level plug (1).
  - Check that the oil reaches the hole.
  - Remove the filler cap (2) and add oil if necessary, ◅ LUBRICANTS AND FUEL.
  - Refit the level plugs and filler cap.



CHECK — Front and rear wheel reducer seals

NB: Check the gear reducers one by one.

- Check no oil is leaking from the gear reducers and plugs.
- If a leak is detected:
  - Turn the wheel to put the drain/filler plug (1) in the horizontal position.
  - Clean the outside of the gear reducer with a clean cloth.
  - Remove the drain/filler plug .
  - Check that the oil reaches the filling hole.
  - Add oil if necessary, ◅ LUBRICANTS AND FUEL.
  - Refit the drain/filler plug:

  Tightening torque = 42 N.m ± 7 N.m



⚠ IMPORTANT ⚠

◁ 2 - DESCRIPTION for more information on the remote control unit.
Select a test area on a firm, level surface that is free of any obstacles.
Look around and above you when manoeuvring the platform.
Pay particular attention to electric lines and any object that may be within the platform's field of operation.
Shut the platform down if a malfunction is detected.

EMERGENCY STOP AND STARTING THE ENGINE (depending on the version)

- Start the engine from the ground control panel.

REMOTE CONTROL UNIT (all versions):

- Press the emergency stop button.

Result:

- The emergency stop button should be locked in the OFF position.
- The engine should stop.
- It should not be possible to activate the controls.

- First version: Turn the button a quarter turn to the right and release it.
- Second version: Pull the button or turn it a quarter turn to the right and release it.
- Turn the emergency stop button a quarter turn to the right and release it.

Result:

- The emergency stop button should be unlocked (in the ON position).
- The start-up page, then the preheat page should be displayed on the user interface screen.

REMOTE CONTROL UNIT (first version):

- Start the engine from the ground control panel.

REMOTE CONTROL UNIT (second version):

- Wait for the preheat cycle to finish and start up the engine.

Result:

- The engine should start.

CONTROLS: MAIN ARM, BASKET/JIB TILT AND BASKET TILT (280 TJ-X ST3A S1)

NB: The engine has been started.

REMOTE CONTROL UNIT (all versions):

- Do not touch the activation button. Test the controls one by one.

Result:

- It should not be possible to activate any of the controls.

- Press and hold down the activation button. Test the controls one by one.

Result:

- It should be possible to activate all the controls.

- 280 TJ-X ST3A S1: Level the basket.
- Level the basket/jib.
- Place the platform in the transport position.
- Stop the engine. Switch off the power to the platform.

647772 (16/09/2020)
260 TJ-XP ST3A S1 / 280 TJ-X ST3A S1

CHECK — Generator (OPTION)

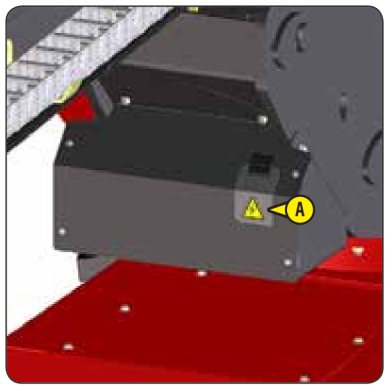

NB: Refer to the sticker in the basket for the voltage and intensity supplied by the electric power socket.

- Switch on the engine.
- Start the generator.
- Plug an electrical appliance into the electric power socket in the basket.

Result:

- The electrical appliance should operate.

- Open the cover (A).
- Locate the test button (1) on the generator and press it.

Result:

- The switch (2) must move from the ON position to the OFF position, the indicator (3) should be green.
- The electrical appliance should not operate.

- Push the switch to the ON position.

Result:

- The switch must remain in the ON position, the indicator should be red.
- The electrical appliance should operate.

- Disconnect the electrical appliance.
- Stop the generator.
- Close the cover (A).
- Stop the engine. Switch off the power to the platform.

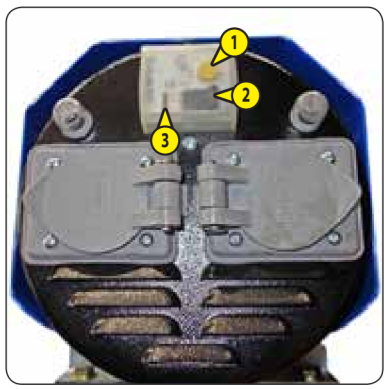

CHECK — Condition of pipe support (ATTACHMENT)

- Check the general condition of the components, the conformity of the installation and the tightening torques (◁ 4 - ATTACHMENTS: PIPE SUPPORT).

CHECK — Condition of panel support (ATTACHMENT)

- Check the general condition of the components, the conformity of the installation and the tightening torques (◁ 4 - ATTACHMENTS: PANEL SUPPORT).

CLEAN — Coolant, air and oil radiators



⚠ IMPORTANT ⚠

Clean the radiators more often when the platform is operating in a dusty environment.
If there is doubt about the condition of the hoses and hose clamps for the coolant and air radiators, it is essential to have them replaced by an authorised professional from the Manitou network.

- Open the left-hand turntable cover.
- Open the swivelling engine plate, ◁ OCCASIONAL OPERATION.
- Clean the radiators (1) with a small brush to remove the dust.
- Clean them with compressed air, from the inside out.
- Check the condition of the hoses and tightening clamps for the coolant and air radiators.
- Check the condition of the oil radiator.
- Close the swivelling engine plate, ◁ OCCASIONAL OPERATION.

⚠ IMPORTANT ⚠

Clean the dry air filter cartridge more often when the platform is operating in a dusty environment. If there is doubt about its condition, have it replaced by an approved professional from the Manitou network.

Never use the platform with a damaged air filter unit. If there is doubt about its condition, have it replaced by an approved professional from the Manitou network.

Never use the platform without a dry air filter cartridge or if it is damaged. If there is doubt about its condition, have it replaced by an approved professional from the Manitou network.

Never use the platform without a dry air filter safety cartridge or if it is damaged. If there is doubt about its condition, have it replaced by an approved professional from the Manitou network.

If there is doubt about the condition of the air intake line, the air suction outlet hose and hose clamps, have them replaced by an authorised professional from the Manitou network.



NB: The left turntable cover is open.

- Clean the outside of the air filter unit (1) with a clean, slightly damp cloth.
- Unlock and remove the cover of the air filter unit (2).
- Clean the inside of the air filter unit cover with a clean, slightly damp cloth.
- Remove the valve (3) and clean it.
- Check the condition of the valve and replace it if it is damaged.
- Put the valve back in place.
- Remove the dry air filter cartridge (4) pulling it gently to prevent dust dispersion.



NB: Do not press the centre of the dry air filter cartridge.

- Check the condition of the dry air filter safety cartridge (5) without taking it out.
- Check the condition of the air filter unit, the air intake line, the air suction outlet hose and the tightening clamps.
- Clean the dry air filter cartridge (4) by tapping it gently.

NB: If necessary clean it with dry compressed air, from the inside out:

• Maximum pressure = 2 bars. Minimum distance = 30 mm.

- Check its condition and clean its seal with a clean cloth.
- Refit it pushing gently.



NB: Do not press the centre of the dry air filter cartridge.

- Refit the air filter unit cover (2), the valve (3) facing downwards, the marking "TOP" facing upwards.
- Close the left-hand turntable cover.

647772 (16/09/2020)
260 TJ-XP ST3A S1 / 280 TJ-X ST3A S1

LUBRICATE — Front and rear axles

⚠ IMPORTANT ⚠

Lubricate the axles more often when the platform is operating in a dusty environment.



STEERING PIVOT PINS

- Remove the caps from the lubrication connectors (1) on the steering pivots of the front and rear axles, on the right and left-hand sides.
- Inject the lubricant into the lubrication connectors, ◁ LUBRICANTS AND FUEL.
- Refit the caps.



OSCILLATING FRONT AXLE:

- Remove the caps from the lubrication connectors (2) on the front axle oscillating bearings.
- Inject the lubricant into the lubrication connectors, ◁ LUBRICANTS AND FUEL.
- Refit the caps.



RESET — Maintenance warning

- Switch on the platform.
- ◁ 2 - DESCRIPTION: DEFINITION OF SUB-MENUS:
  - Enter in the menu, CODE .
  - Enter the access code.
  - Enter in the menu, MAINTENANCE .
  - Zero the corresponding maintenance alerts.
  - Press the MENU key twice to return to the WORK PAGE.
- Switch off the power to the platform.

➲ ❶ 250H - PERIODIC MAINTENANCE - EVERY 250 HOURS OF SERVICE OR 6 MONTHS

ALSO PERFORM THE DAILY MAINTENANCE.

CHECK — Injection pipes, fuel hoses and hose clamps

◅ 50H: MONTHLY MAINTENANCE OR EVERY 50 HOURS OF SERVICE.

CHECK — Reduction gearbox seal

◅ 50H: MONTHLY MAINTENANCE OR EVERY 50 HOURS OF SERVICE.

CHECK — Front and rear axle differential seals

◅ 50H: MONTHLY MAINTENANCE OR EVERY 50 HOURS OF SERVICE.

CHECK — Front and rear wheel reducer seals

◅ 50H: MONTHLY MAINTENANCE OR EVERY 50 HOURS OF SERVICE.

CHECK — Remote control unit

◅ 50H: MONTHLY MAINTENANCE OR EVERY 50 HOURS OF SERVICE.

CHECK — Generator (OPTION)

◅ 50H: MONTHLY MAINTENANCE OR EVERY 50 HOURS OF SERVICE.

CHECK — Condition of pipe support (ATTACHMENT)

◅ 50H: MONTHLY MAINTENANCE OR EVERY 50 HOURS OF SERVICE.

CHECK — Condition of panel support (ATTACHMENT)

◅ 50H: MONTHLY MAINTENANCE OR EVERY 50 HOURS OF SERVICE.

647772 (16/09/2020)
260 TJ-XP ST3A S1 / 280 TJ-X ST3A S1

CHECK — Alternator/fan belt

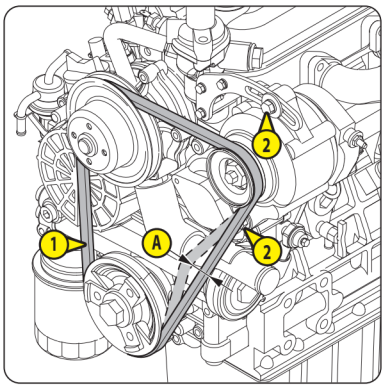

⚠ IMPORTANT ⚠

If there is doubt about the condition of the belt, ◁ 500H: REPLACE: ALTERNATOR/FAN BELT.

- Open the left-hand turntable cover.
- Check the condition of the belt (1). Ensure there are no cracks or signs of wear.
- Check the belt tension between the crankshaft pulley and the alternator pulley:
  - Apply pressure with the thumb = 98 N. The clearance (A) must be between 7 mm and 9 mm to be correct.
- Adjust if necessary:
  - Loosen the screws (2).
  - Adjust the belt tension by swivelling the alternator.
  - Tighten the screws (2).
  - Check the belt tension again.
- Close the left-hand turntable cover.

CHECK — Wheel nut tightening

⚠ IMPORTANT ⚠

Failure to follow this instruction may result in the platform tipping over.

- Check all the wheel nut tightening torques:
  - 550 N.m ± 55 N.m

CHECK — Tightening of the fixing screws for the oscillating cylinders



⚠ IMPORTANT ⚠

Failure to follow this instruction may result in the platform tipping over.

- Remove the right and left covers (1).
- Check the tightening torques for all the fixing screws (2), left and right-hand sides:
  - 375 N.m ± 74 N.m
- Refit the right and left covers.

CHECK — Tightening of the transmission shaft fixing screws



⚠ IMPORTANT ⚠

Failure to follow this instruction may result in the platform losing control.

- Check the tightening torque of all the fixing screws (1), at the front and rear:
  - 38 N.m ± 3.5 N.m

647772 (16/09/2020)
260 TJ-XP ST3A S1 / 280 TJ-X ST3A S1

CHECK — Tightening of the fixing screws for the axles

⚠ IMPORTANT ⚠

Failure to follow this instruction may result in the platform tipping over.

- Check all the fixing screw tightening torques:
  - (1) (Front axle, left and right sides) = 280 N.m ±28 N.m
  - (2) (Front axle oscillating bearings) = 375 N.m ±74 N.m
  - (3) (Rear axle, left and right sides) = 341 N.m ±68 N.m









647772 (16/09/2020)
260 TJ-XP ST3A S1 / 280 TJ-X ST3A S1

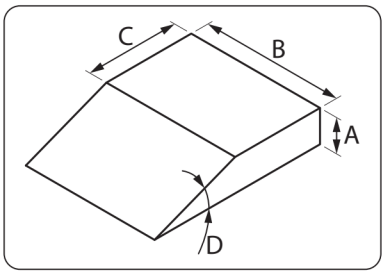

- Place a sufficiently solid ramp in front of the right front wheel:
  - A = 7.5 cm minimum, 9 cm maximum.
  - B = 60 cm minimum.
  - C = 75 cm minimum, 100 cm maximum.
  - D = 10° minimum, 25° maximum.
- Switch on the engine.
- Enter the basket.
- Select RAMP speed 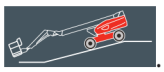.
- Raise the jib slightly.
- Drive the platform slowly forwards until the right front wheel is at the top of the ramp. Brake the platform.
- Turn the turntable 90° to the left.
- Extend the telescope for 2 seconds.
- Drive the platform slowly backwards until the wheel is off the slope. Brake the platform.
- Ask someone on the ground to check the right front wheel and the oscillating cylinders.

Result:

- The right front wheel should be in the upper position and not in contact with the ground.
- The right oscillating cylinder should be retracted and the left one extended.

- Ask the person on the ground to move away.
- Fully retract the telescope.
- As the person on the ground to check the front wheels.

Result:

- The two front wheels must be in contact with the ground.

- Put the turntable in neutral position.
- Fully lower the jib.
- Get out of the basket.
- Place the same ramp in front of the left front wheel.
- Enter the basket.
- Raise the jib slightly.
- Drive the platform slowly forwards until the left front wheel is at the top of the ramp. Brake the platform.
- Turn the turntable 90° to the right.
- Extend the telescope for 2 seconds.
- Drive the platform slowly backwards until the wheel is off the slope. Brake the platform.
- Ask the person on the ground to check the left front wheel and the oscillating cylinders.

Result:

- The left front wheel should be in the upper position and not in contact with the ground.
- The left oscillating cylinder should be retracted and the right one extended.

- Ask the person on the ground to move away.
- Fully retract the telescope.
- As the person on the ground to check the front wheels.

Result:

- The two front wheels must be in contact with the ground.

- Put the turntable in neutral position.
- Fully lower the jib.
- Get out of the basket.

647772 (16/09/2020)
260 TJ-XP ST3A S1 / 280 TJ-X ST3A S1

CHECK — Overload alarm (260 TJ-XP ST3A S1)

⚠ IMPORTANT ⚠

Failure to follow this instruction may result in the platform tipping over.
The PIPE SUPPORT or PANEL SUPPORT attachments must be removed before checking the overload alarm, ◁ 4 - ATTACHMENTS.
Refer to the platform repair manual if the overload system is not correctly calibrated.

NB: The engine has been started. The platform is in transport position. The turntable and basket are in the neutral position. The jib is completely lowered.

- Place a uniformly distributed 440 kg weight in the basket:

Result:

• The overload alarm should go off.

- Remove 40 kg to obtain a load of 400 kg in the basket.

Result:

• The overload alarm should stop.

- Remove the entire load from the basket.
- Stop the engine. Switch off the power to the platform.

CHECK — Overload alarm (280 TJ-X ST3A S1)

⚠ IMPORTANT ⚠

Failure to follow this instruction may result in the platform tipping over.
The PIPE SUPPORT or PANEL SUPPORT attachments must be removed before checking the overload alarm, ◁ 4 - ATTACHMENTS.
Refer to the platform repair manual if the overload system is not correctly calibrated.

NB: The engine has been started. The platform is in transport position. The turntable and basket are in the neutral position. The jib is completely lowered.

- Place a uniformly distributed 385 kg weight in the basket:

Result:

• The overload alarm should go off.

- Remove 35 kg to obtain a load of 350 kg in the basket.

Result:

• The overload alarm should stop.

- Remove the entire load from the basket.
- Enter the basket.

Result:

• The restricted capacity warning light must be off.

- Raise the jib to the horizontal position.
- Fully extend the jib telescope.
- Fully extend the telescope.

Result:

• The restricted capacity warning light should flash.

- Lower the jib.
- Get out of the basket.
- Place a uniformly distributed 264 kg weight in the basket.

Result:

• The overload alarm should go off.

- Remove 24 kg to obtain a load of 240 kg in the basket.

Result:

• The overload alarm should stop.

- Remove the entire load from the basket.
- Fully retract the telescope.
- Fully retract the jib telescope.
- Fully lower the jib.
- Stop the engine. Switch off the power to the platform.

⚠ IMPORTANT ⚠

Failure to follow this instruction may result in the platform losing control.

The PIPE SUPPORT or PANEL SUPPORT attachments must be removed before checking the braking, ◁ 4 - ATTACHMENTS.

PLACING IN FREEWHEEL MODE

NB: The engine has not been started. The platform is in transport position. The turntable and basket are in the neutral position. The jib is completely lowered.

- Perform the freewheel and brake function restoration procedure, ◁ OCCASIONAL OPERATION: PLATFORM WINCHING.

STOPPING DISTANCE ON LEVEL GROUND

NB: The engine has not been started. The platform is in transport position. The turntable and basket are in the neutral position. The jib is completely lowered.

- Switch on the engine.
- Place a uniformly distributed weight in the basket:
  - 260 TJ-XP ST3A S1: Place 400 kg less the operator's weight.
  - 280 TJ-X ST3A S1: Place 350 kg less the operator's weight.
- Drive the platform forward, reach maximum speed and then release the joystick to stop the platform.

Required results:

	Stopping distance
Transport position: HARE speed 	1,400 mm ±300 mm
Working position: WORKING POSITION speed	200 mm ±50 mm

CHECKING THE BRAKES ON A SLOPE

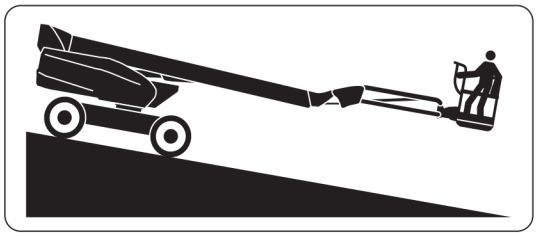

NB: The engine has been started. A load of 400 kg (260 TJ-XP ST3A S1) or 350 kg (280 TJ-X ST3A S1) less the weight of the operator is in the basket.

- Place the platform in the transport position.
- Raise the jib slightly.
- Select RAMP speed 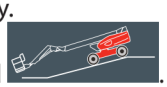.
- Drive the platform forwards slowly on a 25% (14°) slope, facing it, with the basket at the bottom of the slope.
- Brake the platform on the slope. Stop the engine.

Result:

- The platform must not have moved back after one minute.

- Switch on the engine.
- Drive the platform off the slope to a level surface.
- Fully lower the jib.
- Remove the entire load from the basket.
- Stop the engine. Switch off the power to the platform.

647772 (16/09/2020)
260 TJ-XP ST3A S1 / 280 TJ-X ST3A S1

CHECK — Turntable rotation motor oil level

- Open the right-hand turntable cover.
- Check no oil is leaking from the turntable rotation motor (1).
- Remove the filler plug (2).
- Clean the gauge on the filler cap with a clean cloth and put it back in place.
- Remove the filler cap. The level is correct when the oil is between the 2 marks (A) and (B).
- If the level is low, add oil until the correct level is reached, ◁ LUBRICANTS AND FUEL.
- Refit the filler cap.
- Close the right-hand turntable cover panel.



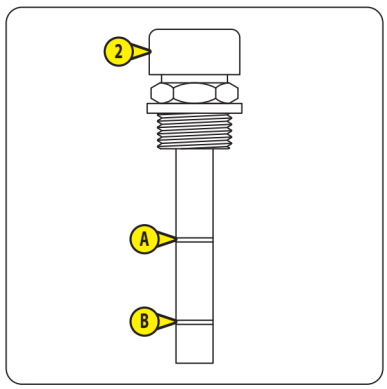

CHECK — Emergency controls

⚠ IMPORTANT ⚠

Use of the platform if there is a malfunction is prohibited.

- Check that the emergency controls are working, ◁ 2 - DESCRIPTION: RESCUE PROCEDURE.

647772 (16/09/2020)
260 TJ-XP ST3A S1 / 280 TJ-X ST3A S1

⚠ IMPORTANT ⚠

Never smoke or approach with a flame when the fuel filter cartridge is being cleaned.
Never use the platform without the fuel filter cartridge or if it is damaged. If there is doubt about its condition,
◁ 500H: REPLACE: FUEL FILTER CARTRIDGE.

- Open the left-hand turntable cover.
- Clean the outside of the fuel filter (1) with a clean cloth.
- Turn the tap (2) to the position (OFF).
- Unscrew the retaining ring (3).
- Remove the tank (4) and the fuel filter cartridge (5). Clean them with clean fuel, ◁ LUBRICANTS AND FUEL.
- Check their condition.
- Check the condition of the fuel hoses and the hose clamps.
- Refit the fuel filter cartridge, tank and retaining ring.
- Bleed the fuel supply circuit ◁ OCCASIONAL MAINTENANCE.
- Close the left-hand turntable cover.



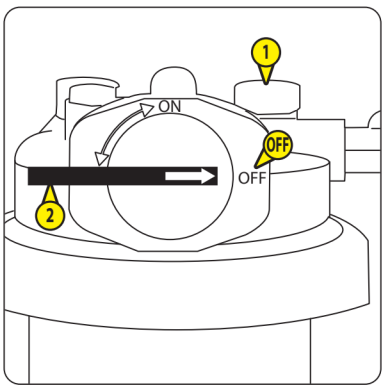

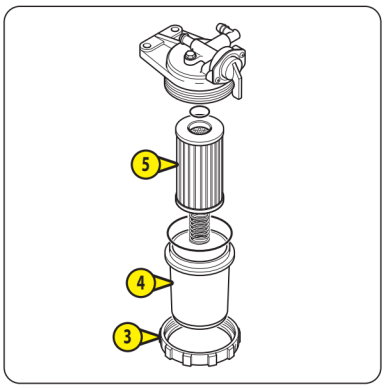

647772 (16/09/2020)
260 TJ-XP ST3A S1 / 280 TJ-X ST3A S1

⚠ IMPORTANT ⚠

Always secure the raised arms with a suitable lifting device.

- Switch on the engine.
- Perform the appropriate main arm, jib and basket/jib tilt movements to access the various lubricators. Secure the raised arms with a suitable lifting device.
- Remove the caps of the lubrication connectors.
- Inject the lubricant into each lubrication connector, refer to LUBRICANTS AND FUEL.
- Refit the caps on the lubrication connectors.
- Fully lower the main arm. Level the basket/jib. Fully lower the jib.

260 TJ-XP ST3A S1

KEY
PIN 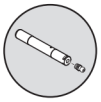
HUB 
CYLINDER RING 

◁ 2 - DESCRIPTION: STICKERS: REMOTE LUBRICATION.

NB: Ⓐ and Ⓑ

◁ LUBRICATE: RING GEAR.

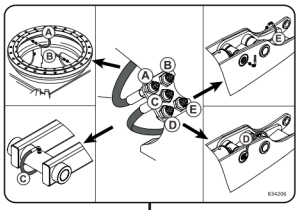

280 TJ-X ST3A S1

KEY
PIN 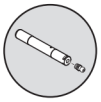
HUB 
CYLINDER RING 

◁ 2 - DESCRIPTION: STICKERS: REMOTE LUBRICATION.

NB: Ⓐ and Ⓑ

◁ LUBRICATE: RING GEAR.

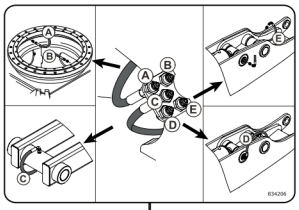

LUBRICATE — Telescope

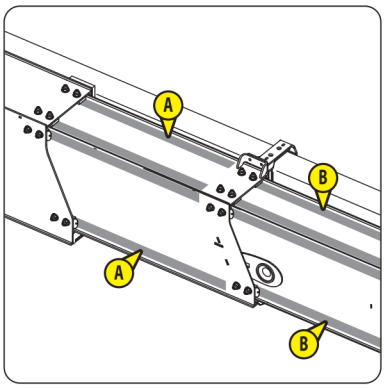

⚠ IMPORTANT ⚠

Lubricate the telescope more often when the platform is operating in a dusty environment.

NB: The engine has been started.

- Raise the jib slightly.
- Fully extend the telescope.

NB: Make sure that the basket does not hit the ground. Lift the jib again if necessary.

- Check the sliding surfaces (A) and (B) of the pads:
  - Surfaces must be smooth and free from corrosion.
- Lubricate the telescope if necessary, ◁ LUBRICANTS AND FUEL.

NB: Extend and retract the telescope several times to spread the lubricant. Remove the excess with a clean cloth.

- Fully retract the telescope.
- 260 TJ-XP ST3A S1: Fully lower the jib.

LUBRICATE — Jib telescope (only for 280 TJ-X ST3A S1)

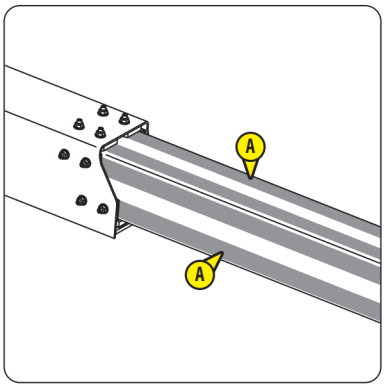

⚠ IMPORTANT ⚠

Lubricate the jib telescope more often when the platform is operating in a dusty environment.

NB: The engine has been started. The jib is slightly raised.

- Fully extend the jib telescope.

NB: Make sure that the basket does not hit the ground. Lift the jib again if necessary.

- Check the sliding surfaces (A) of the pads:
  - Surfaces must be smooth and free from corrosion.
- Lubricate the jib telescope if necessary, ◁ LUBRICANTS AND FUEL.

NB: Extend and retract the jib telescope several times to spread the lubricant. Remove the excess with a clean cloth.

- Fully retract the jib telescope.
- Fully lower the jib.

LUBRICATE — Crown gear

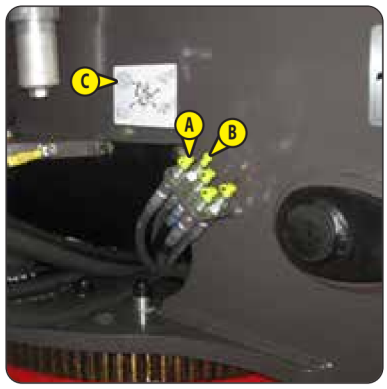

NB: The engine has been started.

- Open the left-hand turntable cover.
- Remove the caps of the lubrication connectors.
- Inject the lubricant into the lubrication connectors, A and B. ◁ LUBRICANTS AND FUEL.

NB: ◁ 2 - DESCRIPTION: STICKERS: REMOTE LUBRICATION C.

- Turn the turntable 90° to the left or the right and inject lubricant again.
- Refit the caps on the lubrication connectors.
- Close the left-hand turntable cover.
- Lubricate the teeth of the crown gear 1, ◁ LUBRICANTS AND FUEL.
- Turn the turntable a full turn to spread the lubricant.
- Put the turntable in neutral position.
- Stop the engine. Switch off the power to the platform.

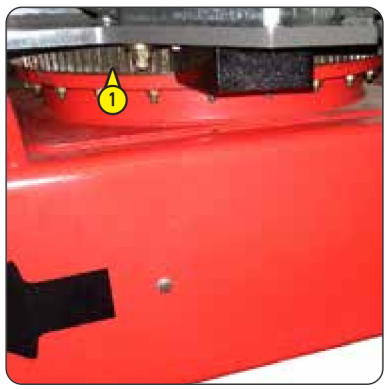

RESET — Maintenance warning

◁ 50H: RESET: MAINTENANCE WARNING.

ALSO PERFORM THE DAILY SERVICE AND THE PERIODIC SERVICE AT 250 HOURS OF SERVICE.

CHECK — Tightening of the fixing screws on the basket

⚠ IMPORTANT ⚠

Failure to follow this instruction may result in the basket falling.
Always secure the raised jib using a suitable lifting device.

- Switch on the engine.
- Raise the jib and secure it using a suitable lifting device.
- Check all the fixing screw tightening torques (1):
  - 90 N.m ± 17.5 N.m
- Fully lower the jib arm.
- Stop the engine. Switch off the power to the platform.
- Take off the cover (2).
- Check all the fixing screw tightening torques (3):
  - 90 N.m ± 17.5 N.m
- Check the tightening torque of the fixing screw (4):
  - 76 N.m ± 15 N.m
- Put the cover (2) back in place.

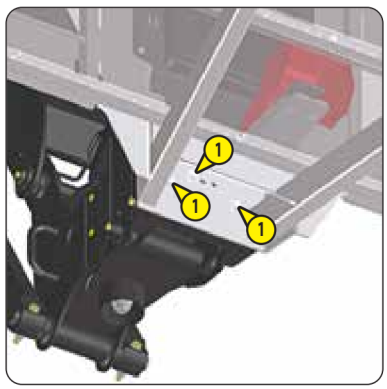

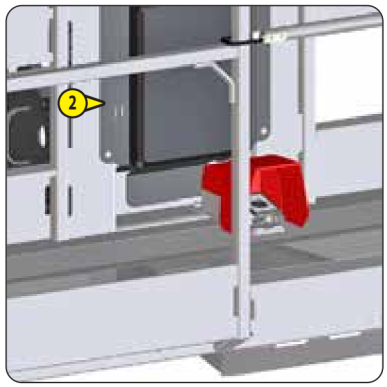

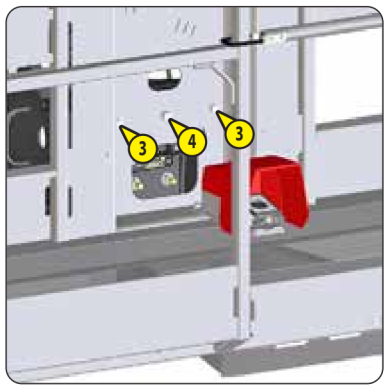

647772 (16/09/2020)
260 TJ-XP ST3A S1 / 280 TJ-X ST3A S1

CHECK Tightening of the fixing screws on the basket rotation cylinder

⚠ IMPORTANT ⚠

Failure to follow this instruction may result in the basket falling.

- Check all the fixing screw tightening torques (1):
  - 76 N.m ± 15 N.m
- Check the tightening torque of the pin (2):
  - 80 N.m ± 16 N.m

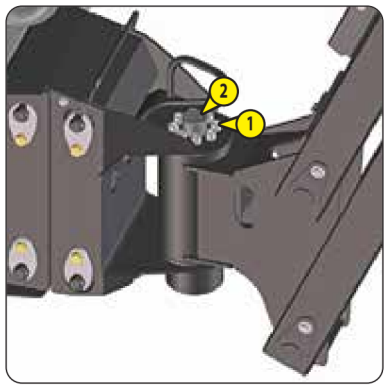



CHECK Tightening of the fixing screws on the telescope cylinder

⚠ IMPORTANT ⚠

Failure to follow this instruction may result in involuntary movement of the telescope.

- Take off the cover (1).
- Check all the fixing screw tightening torques (2):
  - 44 N.m ± 8.5 N.m
- Put the cover (1) back in place.



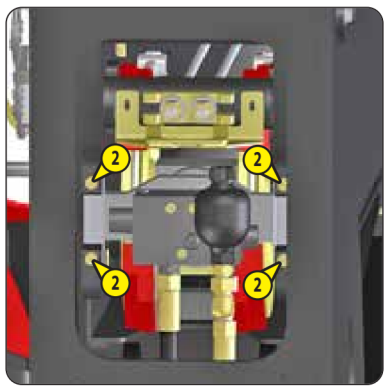

CHECK — Jib telescope chocking (only for 280 TJ-X ST3A S1)

⚠ IMPORTANT ⚠

It is recommended that the jib telescope chocking is adjusted if the clearances are higher than the maximum values, ◁ REPAIR MANUAL.

- Switch on the engine.
- Raise the jib slightly.
- Check all the wheel nut tightening torques (1):
  - 69 N.m ± 6.5 N.m
- Extend the jib telescope for 1 second.
- Check the clearances between the pads and the jib telescope (2):
  - (A) (Upper pads (3)) must be between 1 mm and 1.5 mm.
  - (B) (Side pads (4)) must be between 0.5 mm and 0.75 mm on either side.
- Fully extend the jib telescope.

NB: Make sure that the basket does not hit the ground. Lift the jib again if necessary.

- Check the clearances (A) and (B) again.
- Fully retract the jib telescope.
- Take off the cover (5).
- Place several pallets under the basket.
- Slowly lower the jib until the pads (6) are in contact with the jib.
- Check the clearances between the pads and the jib:
  - (C) (Upper pads (7)) must be between 1 mm and 1.5 mm.
  - (D) (Side pads (8)) must be between 0.5 mm and 0.75 mm on either side.
- Raise the jib slightly.
- Remove the pallets.
- Fully lower the jib.
- Put the cover (5) back in place.

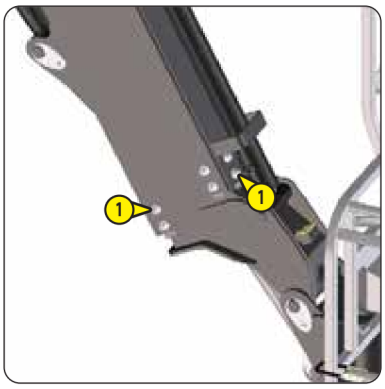

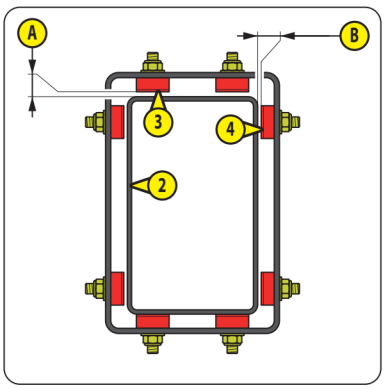

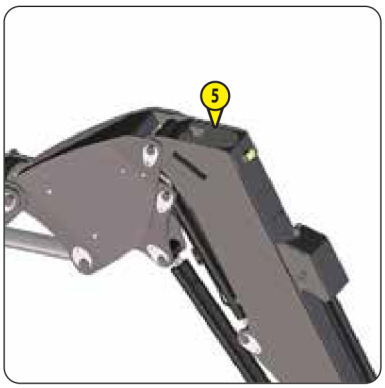

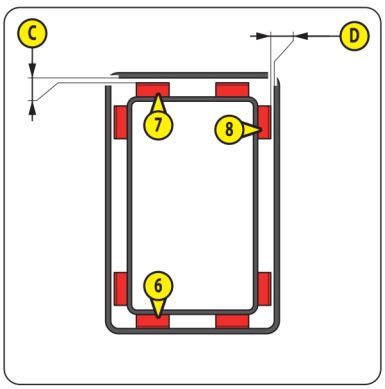

647772 (16/09/2020)
260 TJ-XP ST3A S1 / 280 TJ-X ST3A S1

⚠ IMPORTANT ⚠

It is recommended that the telescope wedging is adjusted if the clearances are higher than the maximum values, ◁ REPAIR MANUAL.

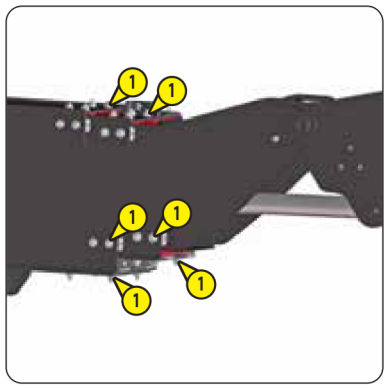

NB: 280 TJ-X ST3A S1, the engine has been started.

- Check all the wheel nut tightening torques (1):
  - 69 N.m ± 6.5 N.m
- 260 TJ-XP ST3A S1: Switch on the engine.
- Raise the jib slightly.
- Extend the telescope for 1 second.
- Check the clearances between the pads and the intermediate telescope (2):
  - (A) (Upper pads (3)) must be between 1 mm and 1.5 mm.
  - (B) (Side pads (4)) must be between 0.5 mm and 0.75 mm on either side.
- Check the clearances between the pads and the telescope (5):
  - (C) (Upper pads (6)) must be between 1 mm and 1.5 mm.
  - (D) (Side pads (7)) must be between 0.5 mm and 0.75 mm on either side.
- Fully extend the telescope.

NB: Make sure that the basket does not hit the ground. Lift the jib again if necessary.

- Check the clearances (A), (B), (C) and (D) again.
- Fully retract the telescope.
- Take off the cover (8).
- Raise the main arm slightly.
- Place several pallets under the basket.
- Slowly lower the main arm until the pads (9) are in contact with the main arm and the pads (10) are in contact with the intermediate telescope (2).
- Check the clearances between the pads and the main arm:
  - (E) (Upper pads (11)) must be between 1 mm and 1.5 mm.
  - (F) (Side pads (12)) must be between 0.5 mm and 0.75 mm on either side.
- Check the clearances between the pads and the intermediate telescope (2):
  - (G) (Upper pads (13)) must be between 1 mm and 1.5 mm.
  - (H) (Side pads (14)) must be between 0.5 mm and 0.75 mm on either side.
- Raise the main arm slightly.
- Remove the pallets.
- Fully lower the main arm.
- Stop the engine. Switch off the power to the platform.
- Put the cover (8) back in place.

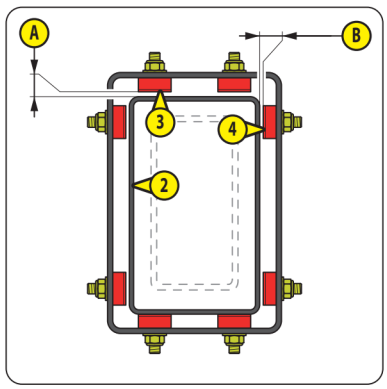

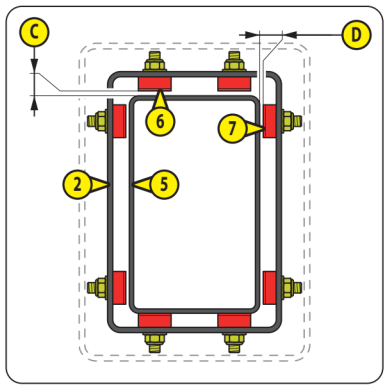



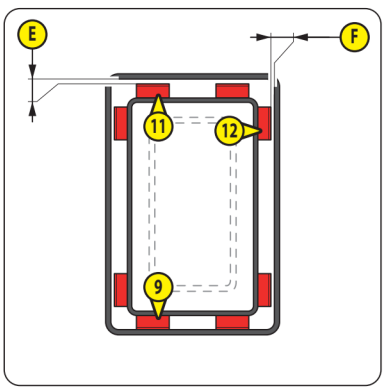

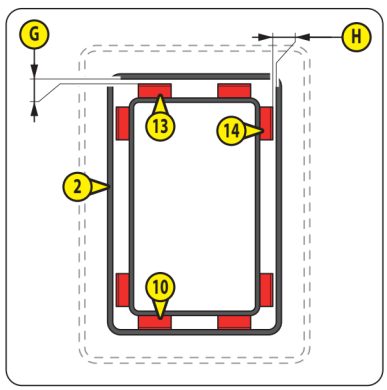

CHECK — Tightening of the fixing screws for the crown gear

⚠ IMPORTANT ⚠

Failure to follow this instruction may result in the platform tipping over.

- Remove the right and left chassis covers.
- Open the right-hand turntable cover.
- Locate the drill hole (A).
- Open the left-hand turntable cover.
- Locate the drill hole (B).
- Switch on the engine.
- Turn the turntable to align the drill holes (A) and (B) with 2 fixing screws (1).
- Check the tightening torque for the first 2 fixing screws (1):
  - 145 N.m ± 14.5 N.m
- Turn the turntable to align the drill holes (A) and (B) with the 2 following fixing screws (1) to check their tightening torques.
- Repeat the steps until the tightening torque for each fixing screw (1) has been checked.
- Check the tightening torque for the fixing screws (2):
  - 145 N.m ± 14.5 N.m

NB: The fixing screws (2) are protected by a plastic cap.

- Put the turntable in neutral position.
- Stop the engine. Switch off the power to the platform.





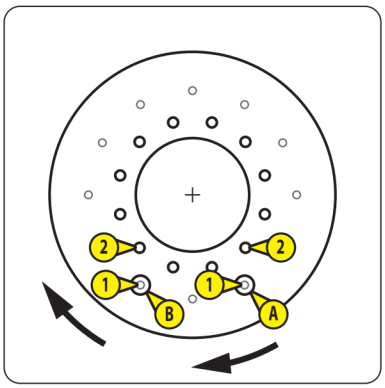

CHECK — Tightening of the fixing screws on the turntable rotation motor

⚠ IMPORTANT ⚠

Failure to follow this instruction may result in involuntary movement of the turntable.

NB: The right and left turntable covers are open. The left and right chassis covers are removed.

- Check all the fixing screw tightening torques:
  - Screw (1) = 192 N.m ± 38 N.m
  - Screw (2) = 341 N.m ± 68 N.m
- Close the left and right turntable covers.



CHECK — Tightening of the cast iron counterweight fixing screws

⚠ IMPORTANT ⚠

Failure to follow this instruction may result in the platform tipping over.

NB: The left and right chassis covers are removed.

- Check all the fixing screw tightening torques (1):
  - 341 N.m ± 68 N.m



CHECK — Tightening of the concrete counterweight fixing screws

Illustrations: (#1) = version without lifting points, (#2) = version with lifting points.

⚠ IMPORTANT ⚠

Failure to follow this instruction may result in the platform tipping over.
Always secure the raised main arm using a suitable lifting device.

NB: The left and right chassis covers are removed.

- Switch on the engine.
- Raise the main arm as far as possible and secure it using a suitable lifting device.
- Stop the engine. Switch off the power to the platform.
- Check the tightening torques for all the fixing screws (1), left and right-hand sides:
  - 341 N.m ± 68 N.m

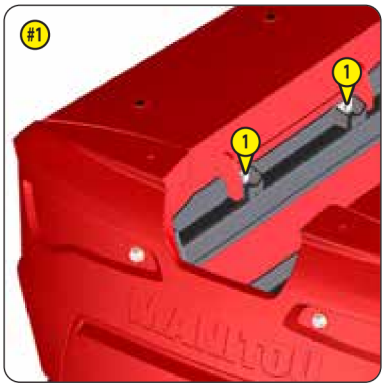

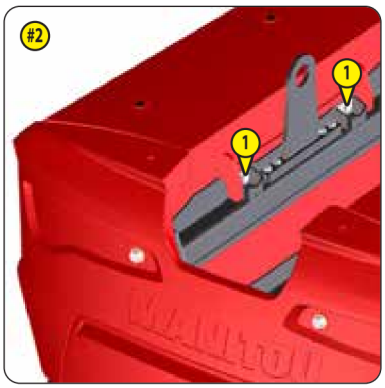



CHECK — Tightening of the fixing screws for the lifting points (depending on version)

⚠ IMPORTANT ⚠

Failure to follow this instruction may result in the platform falling during lifting.
Always secure the raised main arm using a suitable lifting device.

NB: The left and right chassis covers are removed. The main arm is raised and secured.

- Check the tightening torques for all the fixing screws (1), left and right-hand sides:
  - 256 N.m ± 25 N.m

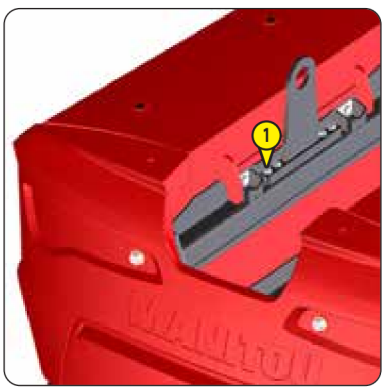

647772 (16/09/2020)
260 TJ-XP ST3A S1 / 280 TJ-X ST3A S1

⚠ IMPORTANT ⚠

Always use a piece of paper or cardboard to check there are no hydraulic oil leaks.
Replace any damaged hydraulic hoses.
Always secure the raised main arm using a suitable lifting device.

NB: The left and right chassis covers are removed. The main arm is raised and secured.

- Open the left and right turntable covers.
- Open the swivelling engine plate, ◁ OCCASIONAL OPERATION.
- Remove the rear chassis cover.
- Check the condition of all the hydraulic hoses and that there are no leaks.
- Refit the right chassis cover.
- Refit the right and left chassis covers.
- Close the swivelling engine plate, ◁ OCCASIONAL OPERATION.
- Switch on the engine.
- Fully lower the main arm.
- Stop the engine. Switch off the power to the platform.
- Check the condition of all the other hydraulic hoses and check that there are no leaks.

REPLACE Alternator/fan belt

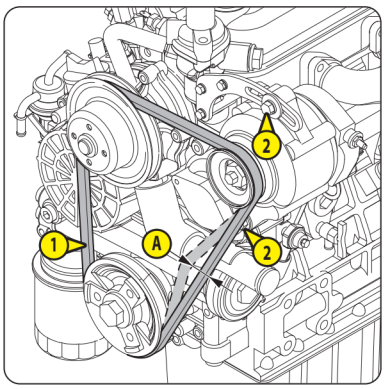

NB: The right and left turntable covers are open. The swivelling engine plate is open.

- Replace the belt (1), ◁ FILTER CARTRIDGES AND BELTS:
  - Loosen the screws (2).
  - Remove the used belt by swivelling the alternator.
  - Replace it with a new belt.
  - Tighten the screws (2).
- Check the belt tension between the crankshaft pulley and the alternator pulley:
  - Apply pressure with the thumb = 98 N. The clearance (A) must be between 7 mm and 9 mm to be correct.
- Adjust if necessary:
  - Loosen the screws (2).
  - Adjust the belt tension by swivelling the alternator.
  - Tighten the screws (2).
  - Check the belt tension again.

647772 (16/09/2020)
260 TJ-XP ST3A S1 / 280 TJ-X ST3A S1

REPLACE — Fuel pre-filter

⚠ IMPORTANT ⚠

Never smoke or approach with a flame when the fuel pre-filter is being replaced.

NB: The right and left turntable covers are open. The swivelling engine plate is open.

- Locate the fuel pre-filter (1) and put a drain container underneath.
- Replace the fuel pre-filter, ◁ FILTER CARTRIDGES AND BELTS:
  - Remove the used fuel pre-filter.
  - Check the condition of the fuel hoses and the hose clamps.
  - Put the new fuel pre-filter in place. Make sure that the hose clamps are properly in place.

NB: Adhere to the fitting direction for the fuel pre-filter shown by an arrow.

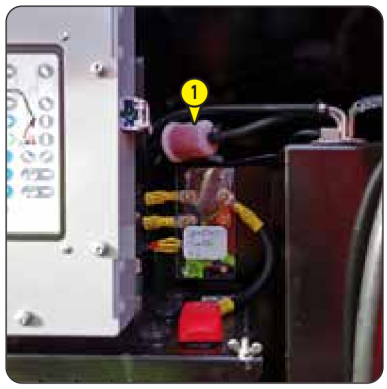

REPLACE — Fuel filter cartridge

⚠ IMPORTANT ⚠

Never smoke or approach with a flame when the fuel filter cartridge is being replaced.
Never use the platform without the fuel filter cartridge or if it is damaged.

NB: The right and left turntable covers are open. The swivelling engine plate is open.

- Clean the outside of the fuel filter (1) with a clean cloth.
- Turn the tap (2) to the position (OFF).
- Replace the fuel filter cartridge (5), ◁ FILTER CARTRIDGES AND BELTS:
  - Unscrew the retaining ring (3).
  - Remove the tank (4) and the used fuel filter cartridge.
  - Clean the tank with clean fuel, ◁ LUBRICANTS AND FUEL.
  - Check its condition.
  - Refit the new fuel filter cartridge, tank and retaining ring.
- Check the condition of the fuel hoses and the hose clamps.
- Bleed the fuel supply circuit ◁ OCCASIONAL MAINTENANCE.



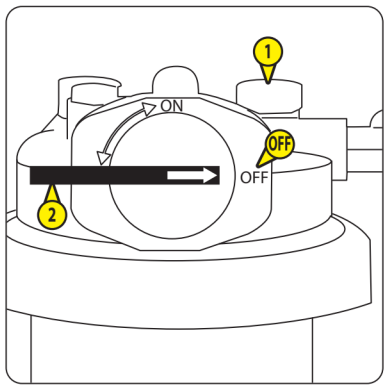

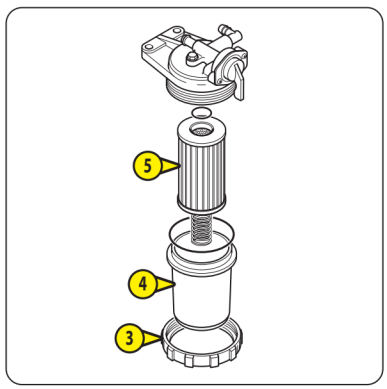

NB: The right and left turntable covers are open. The swivelling engine plate is open.



CHANGE THE OIL

- Switch on the engine.
- Allow it to run for 5 minutes.
- Stop the engine. Switch off the power to the platform.
- Locate the drain plug (1) and put a drain container underneath.
- Remove the drain plug and the filler plug (2).
- Wait until the crankcase is completely drained.



REPLACE THE ENGINE OIL FILTER

- Place a drain tank under the engine oil filter (3).
- Replace the engine oil filter, ◁ FILTER CARTRIDGES AND BELTS:
  - Unscrew the used engine oil filter.
  - Lubricate the seal of the new engine oil filter with clean engine oil, ◁ LUBRICANTS AND FUEL.
  - Screw up the new engine oil filter by hand and tighten it by a three-quarter turn using the oil filter spanner.



FILL THE ENGINE

- Clean around the drain hole with a clean cloth.
- Refit the drain plug.
- Fill the engine with new engine oil, ◁ LUBRICANTS AND FUEL.
- Wait 5 minutes for the oil to settle in the crankcase.
- Refit the filler cap.
- Check the engine oil level, ◁ 10H: CHECK: ENGINE OIL LEVEL.
- Switch on the engine.
- Allow it to run for 5 minutes.
- Check for leaks.
- Stop the engine. Switch off the power to the platform.
- Wait 5 minutes for the oil to settle in the crankcase.
- Check the engine oil level again and top up if necessary.
- Close the swivelling engine plate, ◁ OCCASIONAL OPERATION.

647772 (16/09/2020)
260 TJ-XP ST3A S1 / 280 TJ-X ST3A S1

⚠ IMPORTANT ⚠

Never use the platform with a damaged air filter unit. Replace it if there is any doubt about its condition.
Never use the platform without a dry air filter cartridge or if it is damaged.
Never use the platform without a dry air filter safety cartridge or if it is damaged. If there is doubt about its condition, ◁ 1000H: REPLACE: DRY AIR FILTER SAFETY CARTRIDGE.
If there is doubt about the condition of the air intake line, the air suction outlet hose and hose clamps, ◁ 1000H: REPLACE: AIR INTAKE LINE AND AIR SUCTION OUTLET HOSE.

NB: The right and left turntable covers are open.

- Clean the outside of the air filter unit (1) with a clean, slightly damp cloth.
- Unlock and remove the cover of the air filter unit (2).
- Clean the inside of the air filter unit cover with a clean, slightly damp cloth.
- Remove the valve (3) and clean it.
- Check the condition of the valve and replace it if it is damaged.
- Put the valve back in place.
- Remove the used dry air filter cartridge (4) pulling it gently to prevent dust dispersion.

NB: Do not press the centre of the dry air filter cartridge.

- Check the condition of the dry air filter safety cartridge (5) without taking it out.
- Check the condition of the air filter unit, the air intake line, the air suction outlet hose and the tightening clamps.
- Replace the dry air filter cartridge (4), ◁ FILTER CARTRIDGES AND BELTS:
  - Clean the seal of the new dry air filter cartridge with a clean cloth.
  - Put it in place pushing gently.

  NB: Do not press the centre of the dry air filter cartridge.
- Refit the air filter unit cover (2), the valve (3) facing downwards, the marking "TOP" facing upwards.







647772 (16/09/2020)
260 TJ-XP ST3A S1 / 280 TJ-X ST3A S1

REPLACE — Turntable rotation motor oil

⚠ IMPORTANT ⚠

It is recommended that the oil is slightly warm before being changed.

NB: The right and left turntable covers are open.



CHANGE THE OIL

- Place a drain tank under the drain plug (1).
- Remove the drain plug and the filler plug (2).
- Wait until the crankcase is completely drained.

FILL THE TURNTABLE ROTATION MOTOR

- Clean around the drain hole with a clean cloth.
- Refit the drain plug.
- Fill the turntable rotation motor with new oil, ◁ LUBRICANTS AND FUEL.
- Clean the gauge on the filler cap with a clean cloth and put it back in place.
- Remove the filler cap. The level is correct when the oil is between the 2 marks (A) and (B).
- If the level is low, add oil until the correct level is reached, ◁ LUBRICANTS AND FUEL.
- Refit the filler cap.

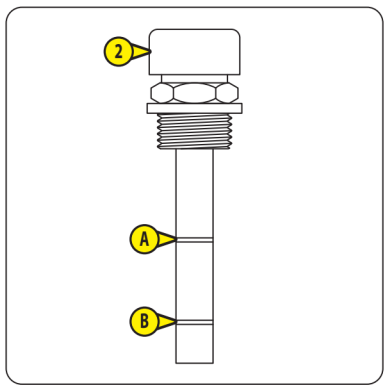

REPLACE — Hydraulic pressure filter cartridge

⚠ IMPORTANT ⚠

Never use the platform without the hydraulic pressure filter cartridge or if it is damaged.

NB: The right and left turntable covers are open.



Clean the outside of the hydraulic pressure filter (1) with a clean cloth.

- Place a drain tank underneath.
- Replace the hydraulic pressure filter cartridge (2), ◁ FILTER CARTRIDGES AND BELTS:
  - Unscrew the hydraulic pressure filter tank.
  - Remove the used hydraulic pressure filter cartridge.
  - Replace it with the new hydraulic pressure filter cartridge.
  - Put the hydraulic pressure filter tank back in place.
- Switch on the engine.
- Lift/lower the main arm and the jib for several minutes.
- Fully lower the main arm and the jib.
- Check for leaks.
- Close the right-hand turntable cover panel.
- Stop the engine. Switch off the power to the platform.



REPLACE — Hydrostatic transmission filter cartridge

⚠ IMPORTANT ⚠

Never use the platform without the hydrostatic transmission filter cartridge or if it is damaged.

NB: The left turntable cover is open.

- Clean the outside of the hydrostatic transmission filter (1) with a clean cloth.
- Place a drain tank underneath.
- Replace the hydrostatic transmission filter cartridge (2), ◁ FILTER CARTRIDGES AND BELTS:
  - Unscrew the hydrostatic transmission filter tank.
  - Remove the used hydrostatic transmission filter cartridge.
  - Replace it with the new hydrostatic transmission filter cartridge.
  - Put the hydrostatic transmission filter tank back in place.
- Close the left-hand turntable cover.
- Switch on the engine.
- Drive the platform forwards and backwards for several minutes.
- Open the left-hand turntable cover.
- Check for leaks.
- Check the hydraulic oil level, ◁ 10H: CHECK: HYDRAULIC OIL LEVEL.
- Close the left-hand turntable cover.
- Stop the engine. Switch off the power to the platform.





RESET — Maintenance warning

◁ 50H: RESET: MAINTENANCE WARNING.

➲ ❸ 1000H - PERIODIC SERVICE - EVERY 1,000 HOURS OF SERVICE OR 2 YEARS

ALSO PERFORM THE DAILY SERVICE AND THE PERIODIC SERVICES AT 250 HOURS AND 500 HOURS OF SERVICE.

CLEAN — Fuel tank

⚠ IMPORTANT ⚠

Never smoke or approach with a flame when the fuel tank is being cleaned.

- Open the right-hand turntable cover.
- Locate the drain plug (1) and put a drain container underneath.
- Open the flap (2).
- Remove the drain plug and the tank plug (3).
- Wait until the tank is completely drained.
- Rinse the tank with 10 litres of clean fuel, ◅ LUBRICANTS AND FUEL.
- Clean around the drain hole with a clean cloth.
- Refit the drain plug.
- Fill the tank completely with clean fuel, ◅ 10H: CHECK: FUEL LEVEL.
- Refit the tank cap and close the flap.
- Bleed the fuel supply circuit ◅ OCCASIONAL MAINTENANCE.
- Close the right-hand turntable cover panel.





REPLACE — Dry air filter safety cartridge

⚠ IMPORTANT ⚠

Never use the platform without a dry air filter safety cartridge or if it is damaged.

- Open the left-hand turntable cover.
- Follow the instructions described in 500H: REPLACE: DRY AIR FILTER CARTRIDGE and replace the dry air filter safety cartridge (5), ◅ FILTER CARTRIDGES AND BELTS:
  - Remove the used dry air filter safety cartridge pulling it gently to prevent dust dispersion.
  - Block the outlet of the air filter unit with a clean cloth.
  - Clean the inside of the air filter unit with a clean, slightly damp cloth.
  - Remove the cloth from the air filter unit outlet.
  - Clean the seal of the new dry air filter safety cartridge with a clean cloth.
  - Put the new dry air filter safety cartridge in place by pushing it gently.

  NB: Do not press the centre of the dry air filter safety cartridge.



647772 (16/09/2020)
260 TJ-XP ST3A S1 / 280 TJ-X ST3A S1

REPLACE — Coolant



⚠ IMPORTANT ⚠

Wait until the engine cools if it has been running for a while.
Do not remove the radiator cap until the engine is completely cooled.

NB: The left turntable cover is open.

- Open the swivelling engine plate, ◁ OCCASIONAL OPERATION.

DRAIN THE COOLANT

- Locate the drain plug (1) under the coolant radiator and put a drain container underneath.
- Remove the drain plug and the radiator cap (2).
- Wait until the coolant has completely drained.



FILL THE COOLING CIRCUIT

- Clean around the drain hole with a clean cloth.
- Refit the drain plug.
- Fill the cooling circuit with new coolant, ◁ LUBRICANTS AND FUEL. The level is correct when the coolant reaches the top of the filling hole.
- Refit the radiator cap.
- Switch on the engine.
- Allow it to run for 5 minutes.
- Check for leaks.
- Stop the engine. Switch off the power to the platform.
- Wait until the engine cools.
- Remove the radiator plug .
- Check the coolant level. Add some if necessary.
- Refit the radiator cap.
- Close the swivelling engine plate, ◁ OCCASIONAL OPERATION.
- Close the left-hand turntable cover.

REPLACE — Reduction gearbox oil

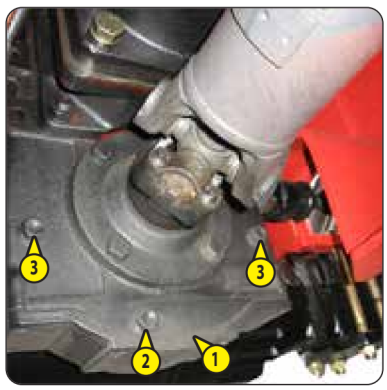

⚠ IMPORTANT ⚠

It is recommended that the oil is slightly warm before being changed.

CHANGE THE OIL

- Locate the reduction gearbox (1) on the rear axle.
- Clean the outside of the reduction gearbox with a clean cloth.
- Place a drain tank under the drain plug (2).
- Remove the drain plug and the filler plug (3).

NB: 2 filler caps (left and right sides).

- Wait until the reduction gearbox is completely drained.

FILL THE ENGINE REDUCTION GEARBOX

- Clean around the drain hole with a clean cloth.
- Refit the drain plug.
- Fill the reduction gearbox with new oil, ◁ LUBRICANTS AND FUEL. The level is correct when the oil reaches the rim of the filling hole.
- Refit the filler cap.

REPLACE — Front and rear axle differential oil

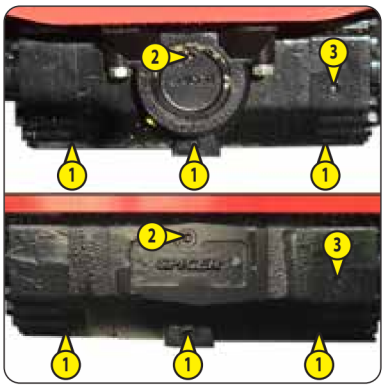

⚠ IMPORTANT ⚠

It is recommended that the oil is slightly warm before being changed.

NB: Check the oil in the axle differentials one by one.

CHANGE THE OIL

- Clean the outside of the axle differential with a clean cloth.
- Place a drain tank under the 3 drain plugs (1).
- Remove the 3 drain plugs and the filler plug (2).
- Wait until the axle differential is completely drained.

FILL THE AXLE DIFFERENTIAL

- Clean around the drain holes with a clean cloth.
- Refit the 3 drain plugs.
- Remove the level plug (3).
- Fill the axle differential with new oil, ◁ LUBRICANTS AND FUEL. The level is correct when the oil reaches the rim of the filling hole (3).
- Refit the level plugs and filler cap.

REPLACE — Front and rear wheel reduction gear oil

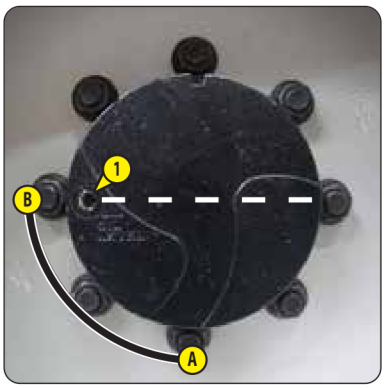

⚠ IMPORTANT ⚠

It is recommended that the oil is slightly warm before being changed.

NB: Check the oil in the wheel reduction gears one by one.

CHANGE THE OIL

- Clean the outside of the gear reducer with a clean cloth.
- Turn the wheel to put the drain/filler plug (1) in position (A).
- Place a drain tank underneath.
- Remove the drain/filler plug .
- Wait until the wheel reduction gear is completely drained.

FILL THE WHEEL REDUCTION GEAR

- Clean around the drain/filler hole with a clean cloth.
- Turn the wheel to put the drain/filler plug (1) in position (B).
- Fill the wheel reduction gear with new oil, ◁ LUBRICANTS AND FUEL. The level is correct when the oil reaches the rim of the filling hole.
- Refit the drain/filler plug:
  - Tightening torque = 42 N.m ± 7 N.m

REPLACE Hydraulic oil

CLEAN Filling filter and suction strainer

⚠ IMPORTANT ⚠

It is recommended that the oil is slightly warm before being changed.
Clean the oil can before adding oil to the hydraulic oil tank.
Use a clean funnel to add oil to the hydraulic oil tank.



CHANGE THE OIL

- Open the right-hand turntable cover.
- Locate the drain plug (1) and put a drain container underneath.
- Remove the drain plug and the tank plug (2).
- Wait until the tank is completely drained.



CLEAN THE FILLING FILTER AND SUCTION STRAINER

- Remove the filling filter (3).
- Clean it with compressed air, from the inside out:
  - Maximum pressure = 3 bars. Minimum distance = 30 mm.
- Check its condition. Replace it if necessary, ◁ FILTER CARTRIDGES AND BELTS.
- Refit the filling filter.
- Remove the panel (4).
- Remove the suction strainer (5) located inside the tank.
- Clean the suction strainer with compressed air, from the inside out.
  - Maximum pressure = 3 bars. Minimum distance = 30 mm.
- Check its condition. Replace it if necessary, ◁ FILTER CARTRIDGES AND BELTS.
- Put the suction strainer and the panel back in place.

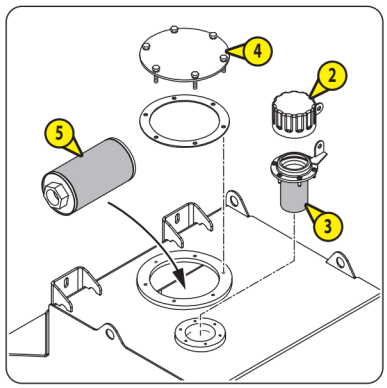

FILL THE HYDRAULIC OIL TANK

- Refit the drain plug.
- Fill the tank with new hydraulic oil, ◁ LUBRICANTS AND FUEL. The level is correct when the oil reaches the red dot on the level indicator (6).
- Refit the tank cap.
- Switch on the engine.
- Use the platform controls for 10 minutes.
- Check for leaks.
- Place the platform in the transport position. Put the turntable and basket in neutral position. Fully lower the jib.
- Check the hydraulic oil level. The level is correct when the oil reaches the red dot on the level indicator.
- Add hydraulic oil if necessary.
- Close the right-hand turntable cover panel.
- Stop the engine. Switch off the power to the platform.

CHECK	Engine silent blocks *
CHECK	Engine speeds *
CHECK	Valve lash *
CHECK	Injectors *
CHECK	Hydrostatic transmission circuit pressure *
CHECK	Crown gear clearance *
CHECK	Condition of telescope cables *
CHECK	Speeds of hydraulic movements *
CHECK	Condition of cylinders *
CHECK	Condition of electric wiring *
REPLACE	Air intake line and air suction hose *
REPLACE	Hoses and hose clamps for the coolant radiator *
REPLACE	Injection pipes, fuel hoses and hose clamps *
RESET	Maintenance warning

◁ 50H: RESET: MAINTENANCE WARNING.

** Contact your dealer.*

647772 (16/09/2020)
260 TJ-XP ST3A S1 / 280 TJ-X ST3A S1

➲ ❹ 2000H - PERIODIC SERVICE - EVERY 2,000 HOURS OF SERVICE OR 4 YEARS

ALSO PERFORM THE DAILY SERVICE AND THE PERIODIC SERVICES AT 250 HOURS, 500 HOURS AND 1,000 HOURS OF SERVICE.

CHECK	Coolant, air and oil radiators *
CHECK	Water pump and thermostat *
CHECK	Injection pump *
CHECK	Alternator and starter *
CHECK	Turbocharger *
CHECK	Hydraulic circuit pressures *
CHECK	Hydraulic circuit flow rates *
CLEAN	Hydraulic oil tank *
RESET	Maintenance warning

◅ 50H: RESET: MAINTENANCE WARNING.

** Contact your dealer.*

➲ ❺ 6000H - PERIODIC SERVICE - EVERY 6,000 HOURS OF SERVICE OR 12 YEARS

REPLACE	Telescope cables

Please contact your dealer.

647772 (16/09/2020)
260 TJ-XP ST3A S1 / 280 TJ-X ST3A S1

REPLACE — Wheels





⚠ IMPORTANT ⚠

◅ 2 - DESCRIPTION: SPECIFICATIONS and refer to the applicable stickers for information about the total weight of the platform and wheel load.

When lifting the platform with a mechanical or hydraulic jack:

- Always use a suitable jack for lifting the platform.

- Make sure that the 2 wheels on the opposite side to the lift are chocked.

- Position the jack near the wheel to be raised.

- Always use suitable jack stands to secure the raised platform.

⚠ IMPORTANT ⚠

Weight of a wheel = 290 kg

NB: We recommend the use of the hydraulic jack (MANITOU Part No. 505507) and the safety jack stand MANITOU Part No. 554772.

- Loosen the wheel nuts slightly.
- Raise the platform.
- Remove the wheel nuts and the wheel.
- Put the new wheel in place.
- Refit the wheel nuts and tighten them slightly with a spanner.
- Lower the platform to the ground.
- Tighten the wheel nuts, ◅ 50H: CHECK: WHEEL NUT TIGHTENING.

⚠ IMPORTANT ⚠

Never smoke or approach with a flame when the fuel supply circuit is being bled.
Always bleed the fuel supply circuit when:
- The fuel tank has been drained and then filled.
- There has been a fuel breakdown and then the fuel tank has been filled.
- A component of the fuel supply circuit has been cleaned or replaced.
If the engine runs irregularly or stops after bleeding the fuel supply circuit, check the condition of the entire fuel supply circuit.

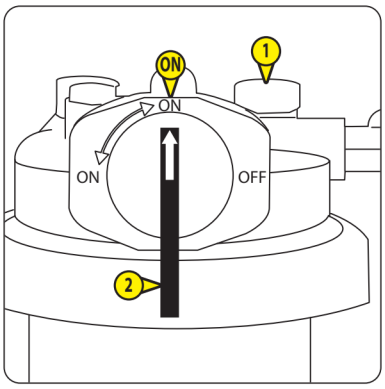

BLEED THE FUEL FILTER

- Open the left-hand turntable cover.
- Open the swivelling engine plate, ◁ OCCASIONAL OPERATION.
- Place a drain tank under the fuel filter (1) .
- Turn the tap (2) to the position (ON).
- Unscrew the bleeder screw (3).
- Locate the fuel pump (4).
- Action the manual pump (5) until fuel runs out of the bleeder screw.
- Continue pumping and tighten the bleeder screw.



BLEED THE INJECTION PUMP

- Locate the bleeder screw (6) and put a drain container underneath.
- Unscrew bleeder screw.
- Action the manual pump (5) until fuel runs out of the bleeder screw.
- Continue pumping and tighten the bleeder screw.
- Switch on the engine.
- Allow it to run for 5 minutes.
- Check for leaks.
- Stop the engine. Switch off the power to the platform.
- Close the swivelling engine plate, ◁ OCCASIONAL OPERATION.
- Close the left-hand turntable cover.

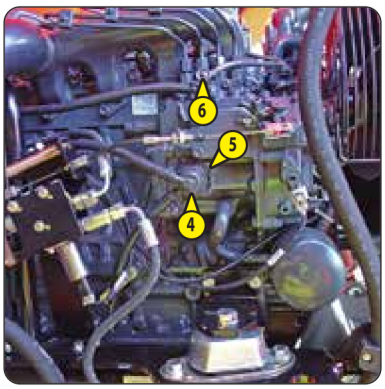

647772 (16/09/2020)
260 TJ-XP ST3A S1 / 280 TJ-X ST3A S1

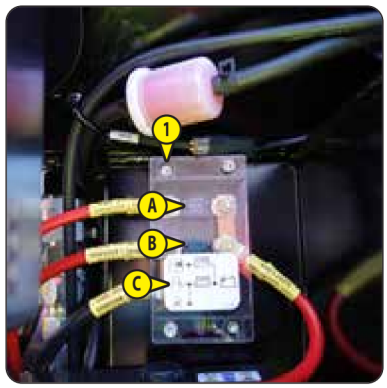

MAIN FUSE BOX

- Open the right-hand turntable cover.
- Locate the main fuse box (1).
- Remove the cover of the box.
- Replace the appropriate fuse:

A	Backup pump	250 A fuse
B	General power supply	350 A fuse

- Put the box cover back in place.
- Close the right-hand turntable cover panel.

NB: STICKERS: POWER FUSES (C).

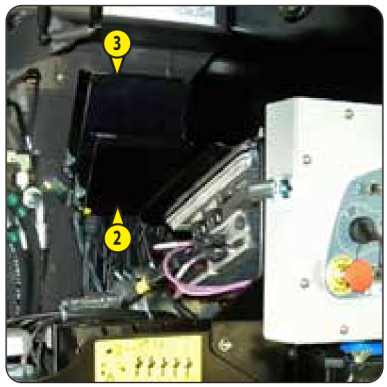

CONNECTION BOX FUSES/RELAYS BRC 20 AND BRC 30

- Open the right-hand turntable cover.
- Locate the connection boxes BRC 20 (2) and BRC 30 (3).
- Unlock and remove the appropriate connection box cover.
- Only for BRC 30: Switch on the platform. Lights over the fuses (F1) to (F14) indicate their status:
  - On = the fuse is OK.
  - Off = the fuse is blown.
- Switch off the power to the platform.
- Replace the appropriate fuse/relay.
- Put the connection box cover back in place.
- Close the right-hand turntable cover panel.

BRC 20:

F1	ECU power supply (+BAT) UPC 20	25 A fuse
F2	ECU power supply (+BAT) UPC 20	25 A fuse
F3	Connection box power supply (+BAT) BRC 20	25 A fuse
F4	Connection box power supply (+BAT) BRC 20	25 A fuse
F5	ECU power supply (+BAT) UPC 20 and interface screen CEK 20	5 A fuse
F6	Working light power supply (OPTION)	10 A fuse

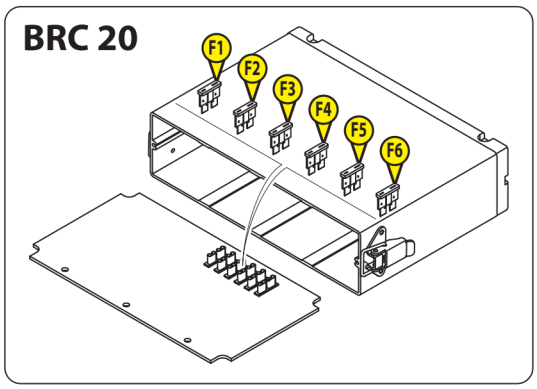

647772 (16/09/2020)
260 TJ-XP ST3A S1 / 280 TJ-X ST3A S1

BRC 30:

F1	Engine starter button	5 A fuse
F2	ECU power supply (+BAT) UPC 30	30 A fuse
F3	ECU power supply (+BAT) UPC 30	30 A fuse
F4	Backup pump power supply	10 A fuse
F5	ECU power supply (+BAT) UPC 110	5 A fuse
F6	Ignition switch	10 A fuse
F7	Engine starter power supply	30 A fuse
F8	Engine preheat power supply	30 A fuse
F9	Engine preheat power supply	30 A fuse
F10	ECU power supply (+BAT) UPC 110	5 A fuse
F11	Connection box power supply (-BAT) UPC 30	10 A fuse
F12	Connection box power supply (-BAT) BRC 30	30 A fuse
F13	Connection box power supply (-BAT) BRC 30	30 A fuse
F14	ECU power supply (-BAT) UPC 110	5 A fuse
K1	Overload safety	12 V relay
K3	Engine starter	12 V relay
K4	Engine immobiliser system (OPTION)	12 V relay
K5	Emergency stop	12 V relay
K6	Emergency stop	12 V relay
K7	Engine shut-down	12 V relay
K8	Engine preheat	12 V relay
K9	Engine preheat	12 V relay

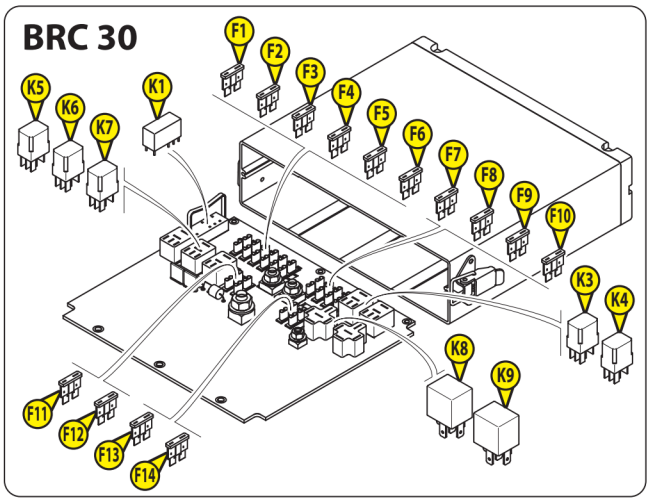

647772 (16/09/2020)
260 TJ-XP ST3A S1 / 280 TJ-X ST3A S1

USE — Swivelling engine plate

⚠ IMPORTANT ⚠

- Always use the handle (A) to open and close the swivelling engine plate.
- Ensure the safety slide is in position (III) (swivelling engine plate locked) before working on the platform.



OPEN THE SWIVELLING ENGINE PLATE

- Open the left-hand turntable cover.
- Remove the screw, nut and washer (1).
- Pull the handle (A) to pivot the engine plate.
- Locate the safety slide (B).
- Ensure that the safety slide is correctly locked, refer to steps (I), (II) and (III) in the illustration.



CLOSE THE SWIVELLING ENGINE PLATE

- Unlock the safety slide (B) in the reverse order of the procedure for locking it.
- Push on the handle (A) to refit the swivelling engine plate.
- Refit the screw, nut and washer (1).
- Close the left-hand turntable cover.

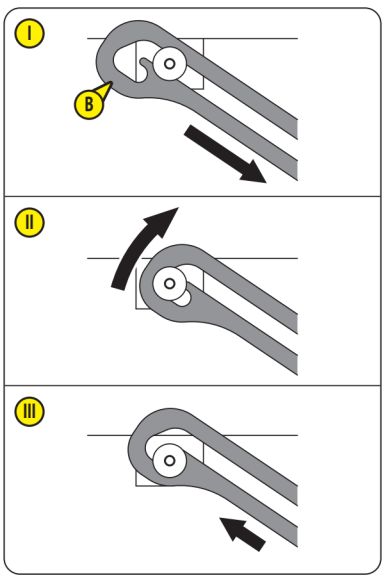

647772 (16/09/2020)
260 TJ-XP ST3A S1 / 280 TJ-X ST3A S1

⚠ IMPORTANT ⚠

It is forbidden to tow the platform.
The platform should be winched in transport position. Winching the platform in working position is prohibited, ◁ 2 - DESCRIPTION: PLATFORM OPERATION: TRANSPORT/WORKING POSITION.
Always use a suitable winch for winching the platform.
The basket must be empty when the platform is being winched.
Before putting the platform into freewheel:
- The platform must be on a level surface.
- The wheels must be chocked.

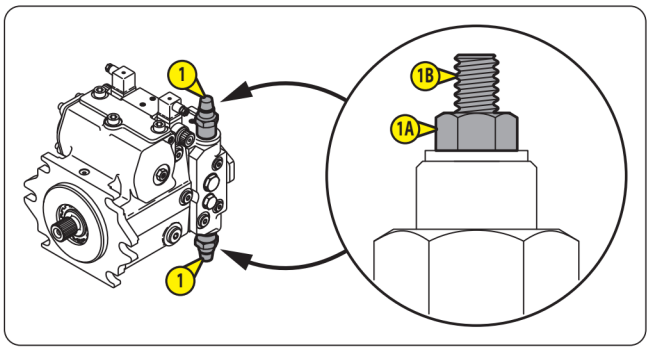

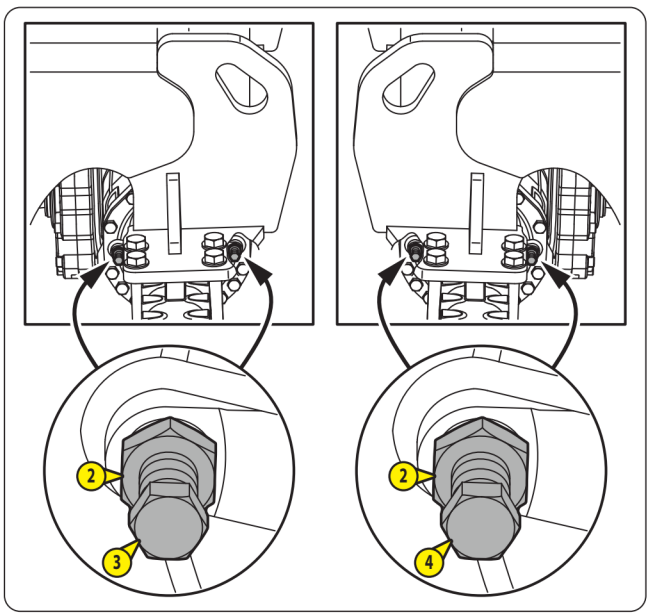

FREEWHEEL AND WINCH

- Attach the winch to the platform's anchorage points, ◁ 2 - DESCRIPTION: STICKERS: ANCHORAGE POINT.
- Bypass the hydrostatic circuit:
  - Open the left-hand turntable cover.
  - Locate the hydrostatic pump and the 2 pressure relief valves (1).
  - Unscrew the nuts (1A). Tighten the screws (1B) to the hard spot and then tighten them a half turn more.
  - Tighten the nuts (1A): Tightening torque 22 N.m.
  - Close the left-hand turntable cover.
- Loosen the rear axle brakes:
  - Locate the 2 screws (3) and the 2 screws (4) to the left and right of the rear axle.
  - Loosen the 2 locknuts (2) by about 8 mm.
  - Tighten the screws (3) and (4) by hand to the hard spot.
  - Tighten the 2 screws alternately (3) by a quarter turn each time until you have gone all the way round.
  - Tighten the 2 screws alternately (4) by a quarter turn each time until you have gone all the way round.
- Disengage front axle brakes:
  - Do the same as for the rear axle.
- Make sure the route is free of any obstruction.
- Remove the wheel chocks.
- Winch the platform slowly.
- Chock the wheels when the platform is in the desired position.

647772 (16/09/2020)
260 TJ-XP ST3A S1 / 280 TJ-X ST3A S1

RESTORING BRAKE FUNCTION

- Restore rear axle brake function:
  - Loosen the 2 screws alternately (3) by a quarter turn each time until you have gone all the way round.
  - Loosen the 2 screws alternately (4) by a quarter turn each time until you have gone all the way round.
  - Unscrew the 4 screws (3) and (4) completely.
  - Change the 4 seals (5).
  - Lubricate the screws (3) and (4) with MANITOU BLACK MULTI-PURPOSE LUBRICANT (◁ LUBRICANTS AND FUEL) and put them back in place.
  - Adjust the distance between the body of the axles and the screw heads = 34 mm ±0.5 mm.
  - Tighten the 4 locknuts (2) and check the distances between the body of the axle and the screw heads.
- Restore front axle brake function:
  - Do the same as for the rear axle.
- Put the hydrostatic circuit back into action:
  - Open the left-hand turntable cover.
  - Unscrew the nuts (1A). Loosen the screws (1B) up to the mechanical stop.
  - Tighten the nuts (1A): Tightening torque 22 N.m.
  - Close the left-hand turntable cover.
- Detach the winch and remove the wheel chocks.
- Test the brakes:
  - Remove the right chassis cover.
  - Locate the coil EV100 on the hydraulic block (6), ◁ 2 - DESCRIPTION: STICKERS: BRAKE BLOCK COILS. Disconnect it.
  - Start the engine and try to drive the platform forwards and backwards.

  Result: The platform should remain stationary.
- Reconnect the coil EV100.
- Refit the right chassis cover.
- Stop the engine. Switch off the power to the platform.

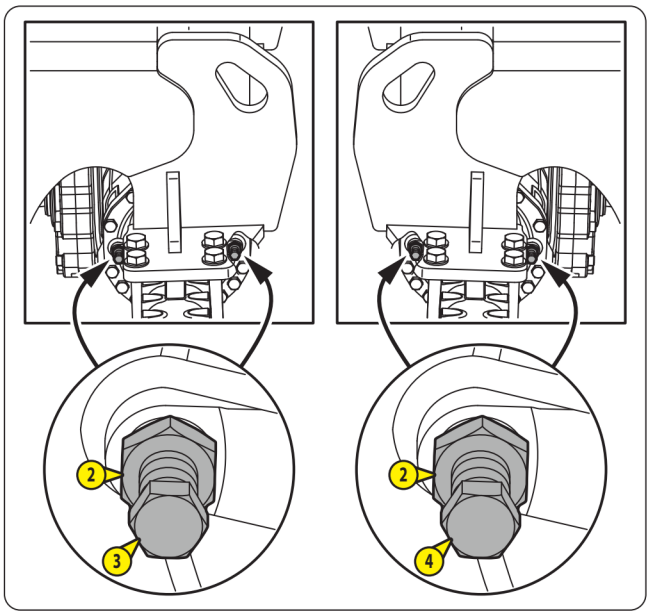

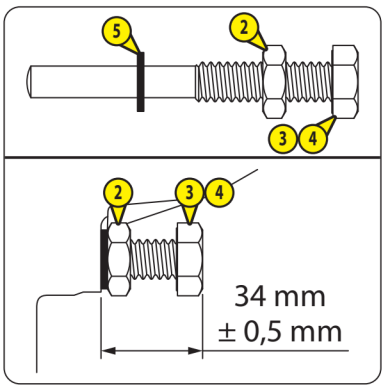

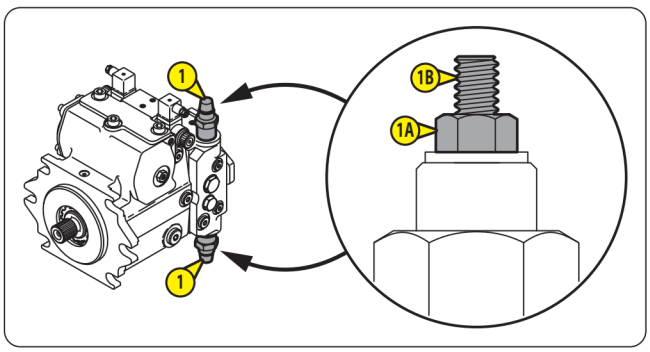

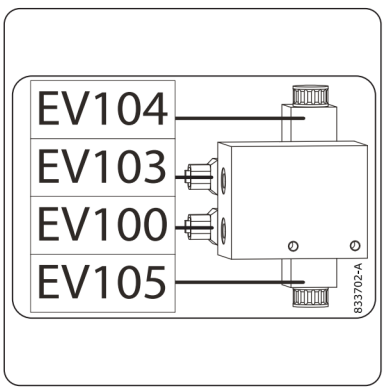

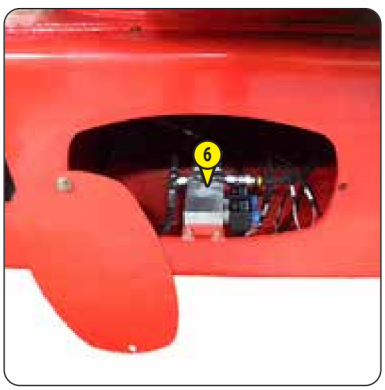

VERSION WITHOUT LIFTING POINTS

⚠ IMPORTANT ⚠

It is forbidden to lift the platform. The platform can be modified to fit it with lifting points on the turntable, ◁ TECHNICAL INFORMATION No. 2664.

FIRST VERSION WITH 2 LIFTING POINTS

⚠ IMPORTANT ⚠

Only for platforms modified according to TECHNICAL INFORMATION No. 2664: Platforms fitted with 2 lifting points (1) on the turntable (no lifting points on the chassis at the rear of the platform, ◁ illustration (A)).

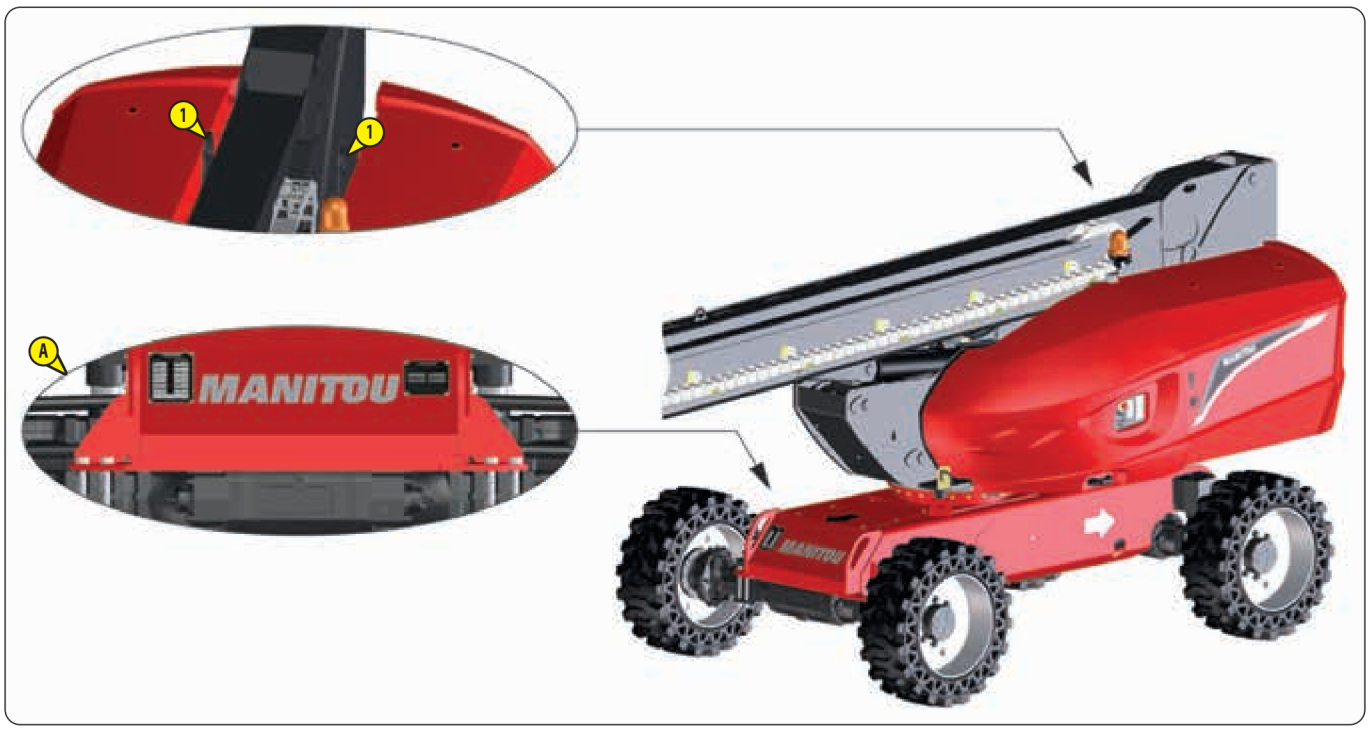

SECOND VERSION WITH 4 LIFTING POINTS

⚠ IMPORTANT ⚠

Only for platforms fitted with 2 lifting points (1) on the turntable and 2 lifting points (2) on the chassis at the rear of the platform.

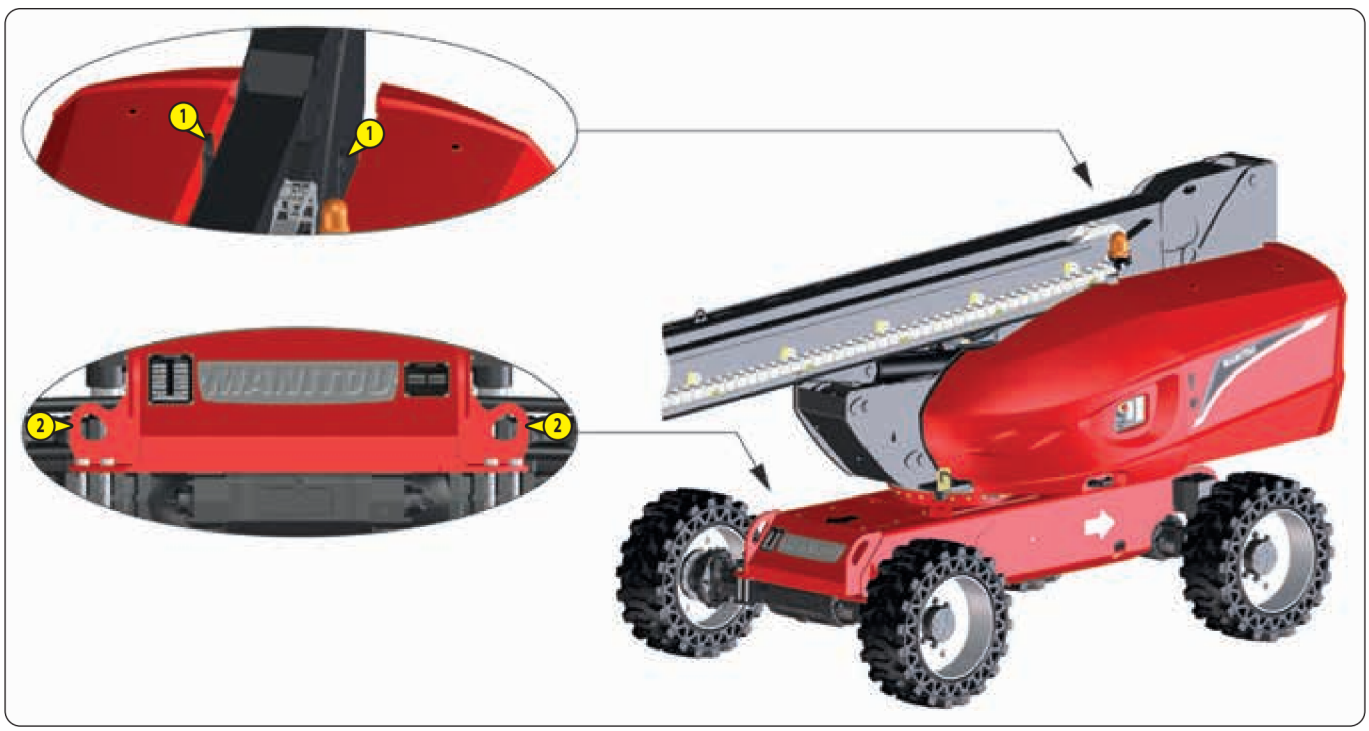

647772 (16/09/2020)
260 TJ-XP ST3A S1 / 280 TJ-X ST3A S1

FIRST VERSION WITH 2 LIFTING POINTS

⚠ IMPORTANT ⚠

The surface of the unloading/destination zone must be solid, level and even.
If the unloading/destination zone is a flatbed truck:
- The flatbed truck must be stationary on firm, level ground.
- The wheels of the flatbed truck must be chocked.
Make sure that the slings are solid enough to bear the weight of the platform.
Make sure that the lifting capacity of the crane is sufficient to bear the weight of the platform.
The turntable must be locked before the platform is lifted, ◁ 2 -DESCRIPTION: SAFETY COMPONENTS: TURNTABLE LOCKING PIN.
Covers must be closed and locked (if applicable) while the platform is being lifted.

CG = "CENTER OF GRAVITY" CENTRE OF GRAVITY		
	260 TJ-XP ST3A S1	280 TJ-X ST3A S1
X	1,870 mm	1,770 mm
Y	1,470 mm	1,540 mm
B	1,060 mm	1,160 mm
"TOTAL MASS" TOTAL WEIGHT	16,400 kg (36,155 lbs)	16,650 kg (36,710 lbs)

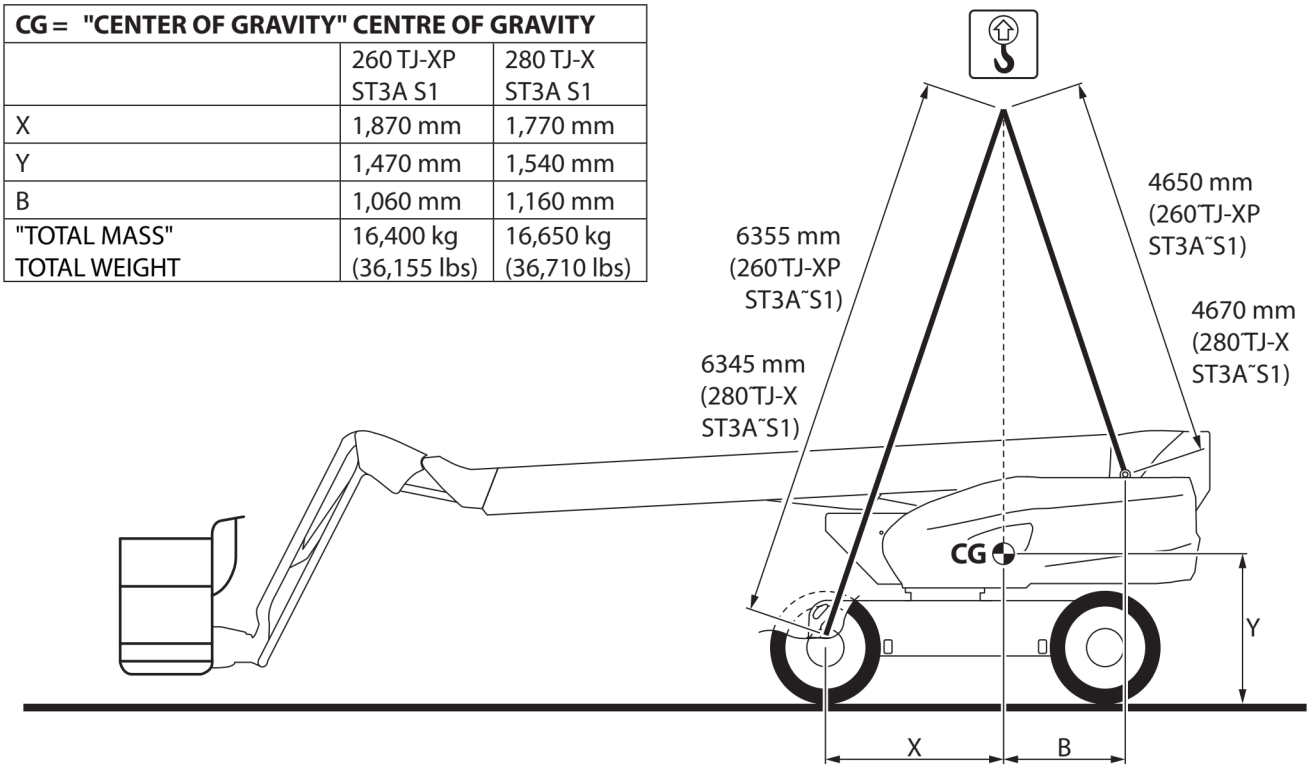

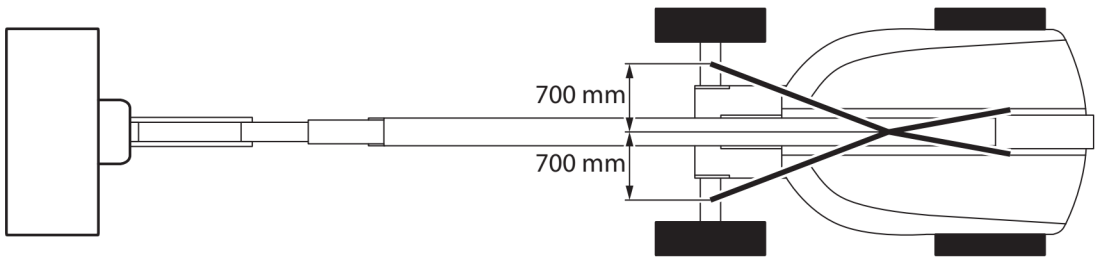

- Mark out a large safety zone around the platform.
- Switch on the engine.
- Put the platform in transport position. Put the turntable and basket in neutral position, ◅ 2 - DESCRIPTION: PLATFORM OPERATION: TRANSPORT/WORKING POSITION.
- Fully lower the jib.
- Lock the turntable, ◅ 2 - DESCRIPTION: SAFETY COMPONENTS: TURNTABLE LOCKING PIN.
- Stop the engine. Switch off the power to the platform. Remove the key.
- Attach slings to the 2 lifting points on the turntable, ◅ 2 - DESCRIPTION: STICKERS: LIFTING POINT.
- Attach the slings around the rear axle as shown in the illustration.
- Attach the slings at 1 point to the crane's lifting hook.
- Slowly raise the crane's lifting hook until the slings are moderately taut.
- If necessary, adjust the slings to prevent damage and keep the platform level.
- Make sure that there is nobody in the safety zone.
- Slowly lift the platform and move it to the destination zone.
- Slowly lower the platform until the 4 wheels are in contact with the destination surface.
- Lower the crane's lifting hook until the slings are no longer taut.
- Detach the slings.

NB: ◅ 2 - DESCRIPTION: STICKERS: LIFTING.

SECOND VERSION WITH 4 LIFTING POINTS

⚠ IMPORTANT ⚠

The surface of the unloading/destination zone must be solid, level and even.
If the unloading/destination zone is a flatbed truck:
- The flatbed truck must be stationary on firm, level ground.
- The wheels of the flatbed truck must be chocked.
Make sure that the slings are solid enough to bear the weight of the platform.
Make sure that the lifting capacity of the crane is sufficient to bear the weight of the platform.
The turntable must be locked before the platform is lifted, ◁ 2 -DESCRIPTION: SAFETY COMPONENTS: TURNTABLE LOCKING PIN.
Covers must be closed and locked (if applicable) while the platform is being lifted.

CG = "CENTER OF GRAVITY" CENTRE OF GRAVITY		
	260 TJ-XP ST3A S1	280 TJ-X ST3A S1
X	1,870 mm	1,770 mm
Y	1,470 mm	1,540 mm
A	1,865 mm	1,765 mm
B	1,060 mm	1,160 mm
"TOTAL MASS" TOTAL WEIGHT	16,400 kg (36,155 lbs)	16,650 kg (36,710 lbs)

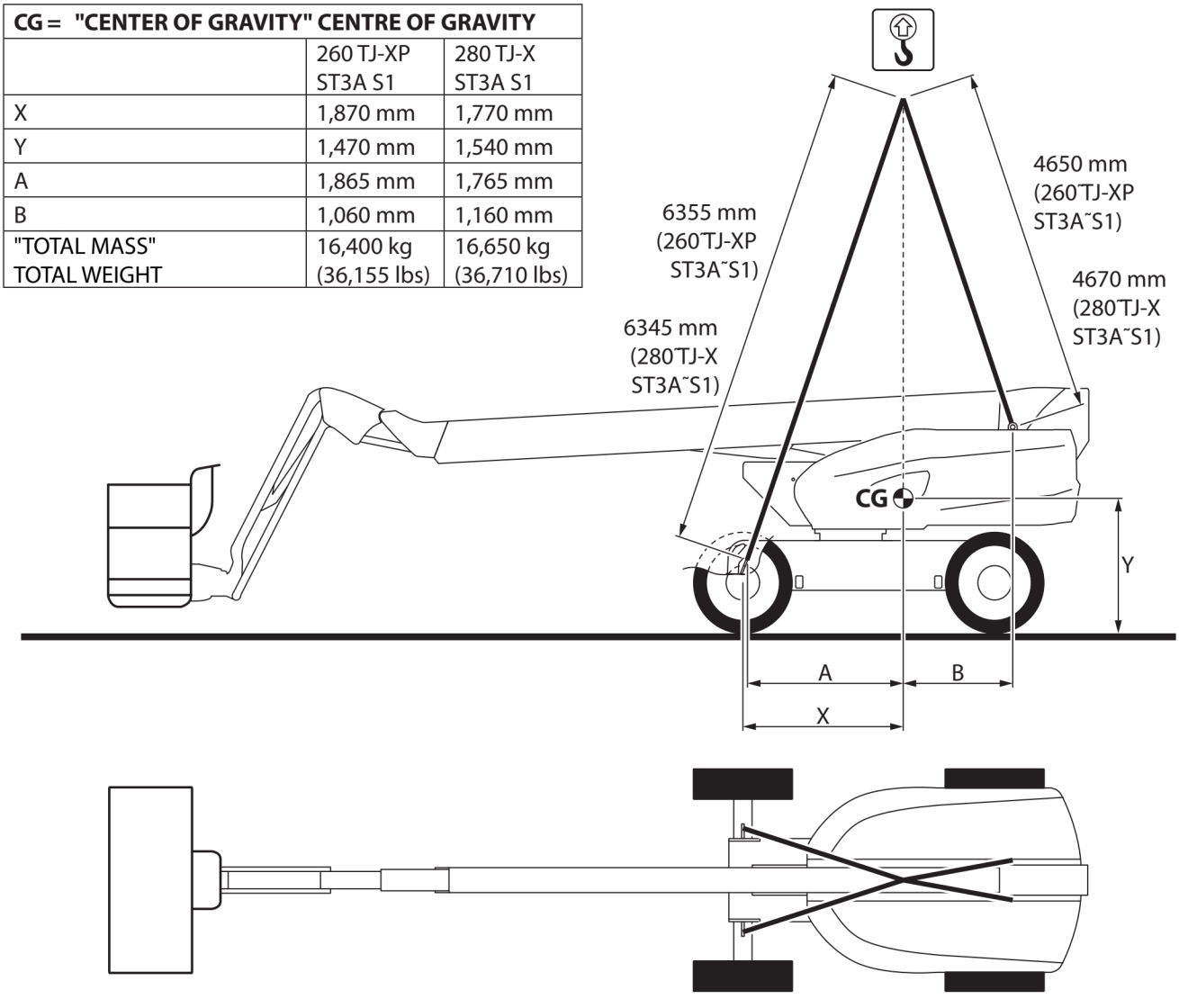

- Mark out a large safety zone around the platform.
- Switch on the engine.
- Put the platform in transport position. Put the turntable and basket in neutral position, ◅ 2 - DESCRIPTION: PLATFORM OPERATION: TRANSPORT/WORKING POSITION.
- Fully lower the jib.
- Lock the turntable, ◅ 2 - DESCRIPTION: SAFETY COMPONENTS: TURNTABLE LOCKING PIN.
- Stop the engine. Switch off the power to the platform. Remove the key.
- Attach slings to the 4 lifting points, ◅ 2 - DESCRIPTION: STICKERS: LIFTING POINT.
- Attach the slings at 1 point to the crane's lifting hook.
- Slowly raise the crane's lifting hook until the slings are moderately taut.
- If necessary, adjust the slings to prevent damage and keep the platform level.
- Make sure that there is nobody in the safety zone.
- Slowly lift the platform and move it to the destination zone.
- Slowly lower the platform until the 4 wheels are in contact with the destination surface.
- Lower the crane's lifting hook until the slings are no longer taut.
- Detach the slings.

NB: ◅ 2 - DESCRIPTION: STICKERS: LIFTING.

◁ 2 - DESCRIPTION: TRANSPORTING THE PLATFORM.

647772 (16/09/2020)
260 TJ-XP ST3A S1 / 280 TJ-X ST3A S1

4 - ATTACHMENTS

4 - ATTACHMENTS

PIPE SUPPORT Part no. 52571261OPT 4-4

PANEL SUPPORT Part No. 52571261OPT 4-10

INTRODUCTION

⚠ IMPORTANT ⚠

The PIPE SUPPORT and the PANEL SUPPORT must not be installed at the same time on the same platform:
- Remove the PANEL SUPPORT to install the PIPE SUPPORT.
The PIPE SUPPORT must be installed or removed by qualified maintenance personnel.

STICKERS

⚠ IMPORTANT ⚠

Clean all stickers so that they are legible.
Any stickers which are illegible or damaged must be replaced.
Check that the stickers are present after replacing any spare parts.

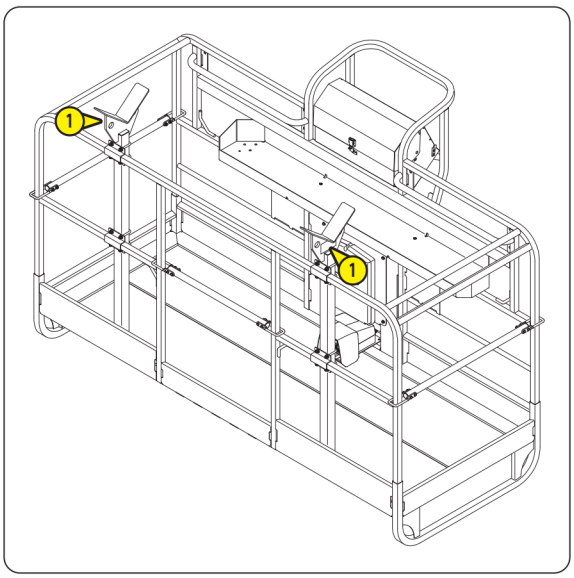

1 - PIPE SUPPORT STICKER — Part No. 52557917

Indicates the maximum permissible weight on the PIPE SUPPORT.

NB: 1 sticker on each support, total quantity = 2.

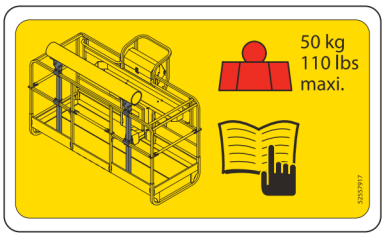

⚠ IMPORTANT ⚠

The weight of the PIPE SUPPORT reduces the basket's maximum load capacity.

LOAD SPECIFICATIONS		260 TJ-XP ST3A S1			±
Platform					
- Maximum load capacity in the basket: Nobody is in the basket, the PIPE SUPPORT is installed without any load on it	kg (lbs)	385 (848)			-
- Maximum number of people in the basket (indoor use/ outdoor use)		1 / 1	2 / 2	3 / 3	-
- Maximum load capacity of the PIPE SUPPORT	kg (lbs)	50 (110)	50 (110)	50 (110)	-
- Remaining maximum load capacity of the basket depending on the number of people in the basket: The PIPE SUPPORT is installed with the maximum load on it	kg (lbs)	255 (562)	175 (385)	95 (209)	-

LOAD SPECIFICATIONS		280 TJ-X ST3A S1					±
		ZONE A*			ZONE B*		
Platform							
- Maximum load capacity in the basket: Nobody is in the basket, the PIPE SUPPORT is installed without any load on it	kg (lbs)	335 (738)			225 (496)		-
- Maximum number of people in the basket (indoor use/outdoor use)		1 / 1	2 / 2	3 / 3	1 / 1	2 / 2	-
- Maximum load capacity of the PIPE SUPPORT	kg (lbs)	50 (110)	50 (110)	50 (110)	50 (110)	50 (110)	-
- Remaining maximum load capacity of the basket depending on the number of people in the basket: The PIPE SUPPORT is installed with the maximum load on it	kg (lbs)	205 (451)	125 (275)	45 (99)	95 (209)	15 (33)	-

*: ◁ 2 - DESCRIPTION: DIMENSIONS AND DIAGRAM 280 TJ-X ST3A S1 for definition of the zones.

⚠ IMPORTANT ⚠

Check the condition of all the components and stickers before any PIPE SUPPORT is installed. Replace them if necessary.
Replace the nuts (5) each time the PIPE SUPPORT is installed.
The supports (1) must be fitted inside the basket and must be resting on the floor of the basket.
The supports (1) must be fitted symmetrically on each side of the basket and must be perpendicular to the basket floor.

- Switch on the engine.
- Move the platform to a level surface.
- Put the platform in transport position. Put the turntable and basket in neutral position, ◁ 2 - DESCRIPTION: PLATFORM OPERATION: TRANSPORT/WORKING POSITION.
- Fully lower the jib.
- Stop the engine. Switch off the power to the platform.
- Put the first support (1) inside the basket between the 2 vertical guardrails (A1) and (B1).

NB: Place the sticker (C) towards the outside.

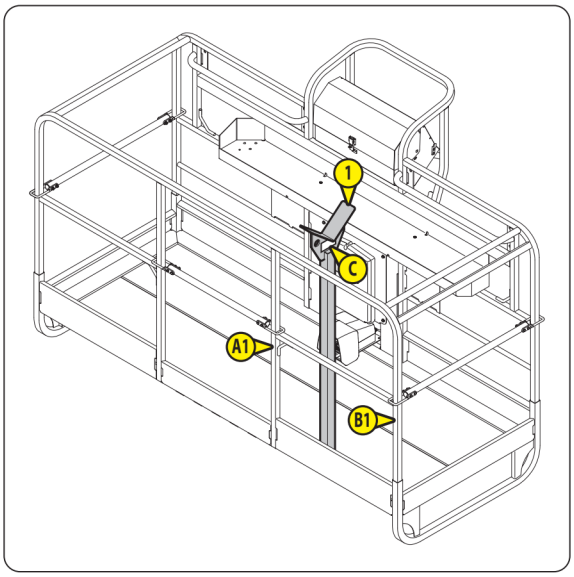

- Screw the first support (1) to the basket using 2 flanges (2) and fixing elements (3), (4) and (5).

NB: Tighten the nuts (5) by hand.

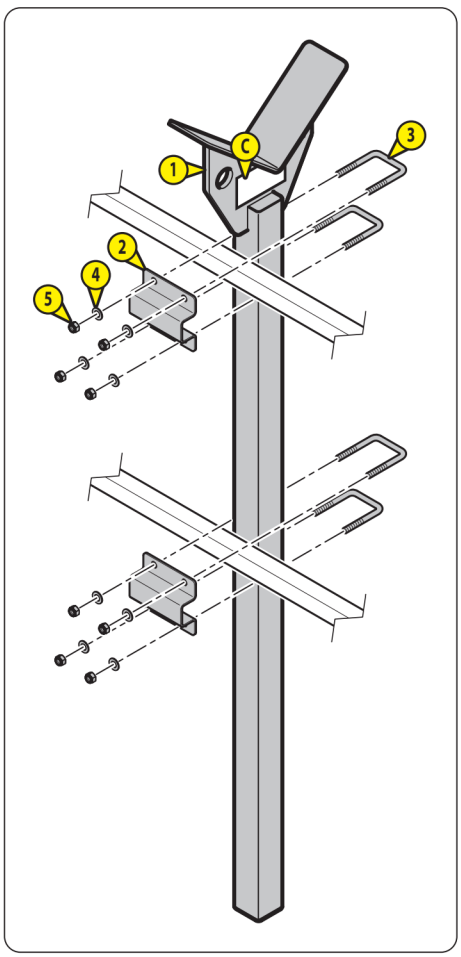

647772 (16/09/2020)
260 TJ-XP ST3A S1 / 280 TJ-X ST3A S1

- Put the second support (1) inside the basket between the 2 vertical guardrails (A2) and (B2).

NB: Place the sticker (C) towards the outside.

- Screw the second support (1) to the basket using 2 flanges (2) and fixing elements (3), (4) and (5), refer to the previous page.

NB: Tighten the nuts (5) by hand.

- Adjust the distance between the 2 supports (1).
- Tighten all the nuts (5) in a criss-cross fashion:
  - The nuts are correctly tightened when 2 threads of the U-bolts (3) are visible.

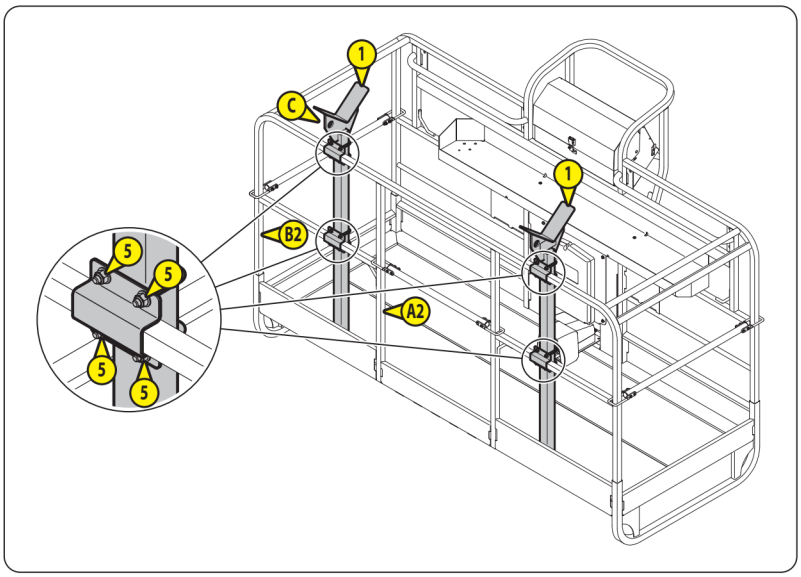



DISMANTLING

⚠ IMPORTANT ⚠

After each time the PIPE SUPPORT is dismantled:

- The nuts (5) must be replaced whenever the PIPE SUPPORT is installed, it is recommended to replace them with new ones for the next installation.

- Check the condition of all the other components and stickers. Replace them if necessary.

- Store the PIPE SUPPORT in a clean, dry place.

- Switch on the engine.
- Move the platform to a level surface.
- Put the platform in transport position. Put the turntable and basket in neutral position, ◁ 2 - DESCRIPTION: PLATFORM OPERATION: TRANSPORT/WORKING POSITION.
- Fully lower the jib.
- Stop the engine. Switch off the power to the platform.
- Unscrew the fixing elements (3), (4) and (5), refer to the previous page.
- Remove the 2 supports (1) and the 4 flanges (2).
- Discard the nuts (5).
- Store the PIPE SUPPORT with new nuts (5).

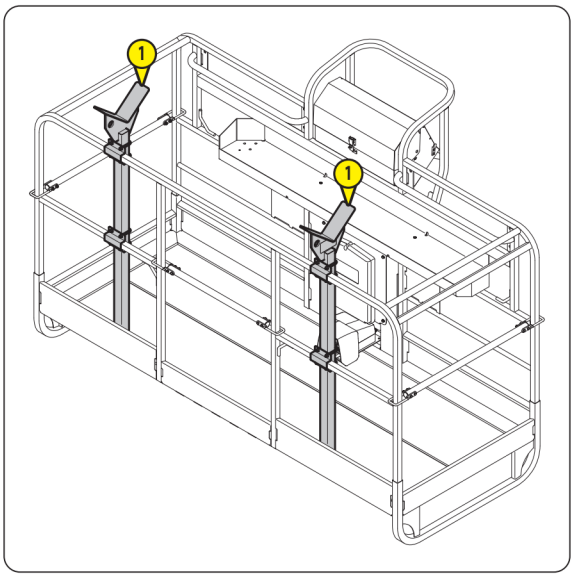

⚠ IMPORTANT ⚠

The weight of the PIPE SUPPORT reduces the basket's maximum load capacity, ◁ SPECIFICATIONS.
Check that the PIPE SUPPORT is correctly adjusted, ◁ ADJUSTMENT.
The platform must be on a level surface and the basket must be level before pipes can be placed on the PIPE SUPPORT.
The length of the pipes should not be greater than the width of the basket.
The pipes must be centred with the basket.
Make sure that the straps are solid enough to bear the weight of the pipes.
Make sure that the pipes are correctly attached with straps before the basket is lifted.

- Move the platform to a level surface.
- Put the platform in transport position. Put the turntable and basket in neutral position, ◁ 2 - DESCRIPTION: PLATFORM OPERATION: TRANSPORT/WORKING POSITION.
- Fully lower the jib.
- Make sure that the basket is level. If necessary, tilt the basket/jib upwards or downwards.
- If necessary, adjust the distance between the supports, ◁ ADJUSTMENT.
- Place one or more pipes on the PIPE SUPPORT.
- Attach the pipes to the supports using a strap on each side.

NB: The straps are not supplied with the PIPE SUPPORT.

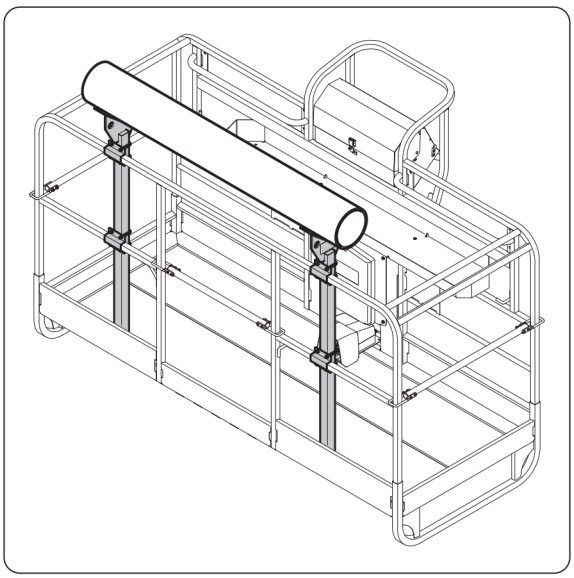

⚠ IMPORTANT ⚠

The supports (1) must be fitted inside the basket and must be resting on the floor of the basket.
The supports (1) must be fitted symmetrically on each side of the basket and must be perpendicular to the basket floor.

- Move the platform to a level surface.
- Put the platform in transport position. Put the turntable and basket in neutral position, ◁ 2 - DESCRIPTION: PLATFORM OPERATION: TRANSPORT/WORKING POSITION.
- Fully lower the jib.
- Stop the engine. Switch off the power to the platform.
- Loosen the nuts (5) slightly.
- Adjust the width between the 2 supports (1).
- Tighten all the nuts (5) in a criss-cross fashion:
  - The nuts are correctly tightened when 2 threads of the U-bolts (3) are visible.

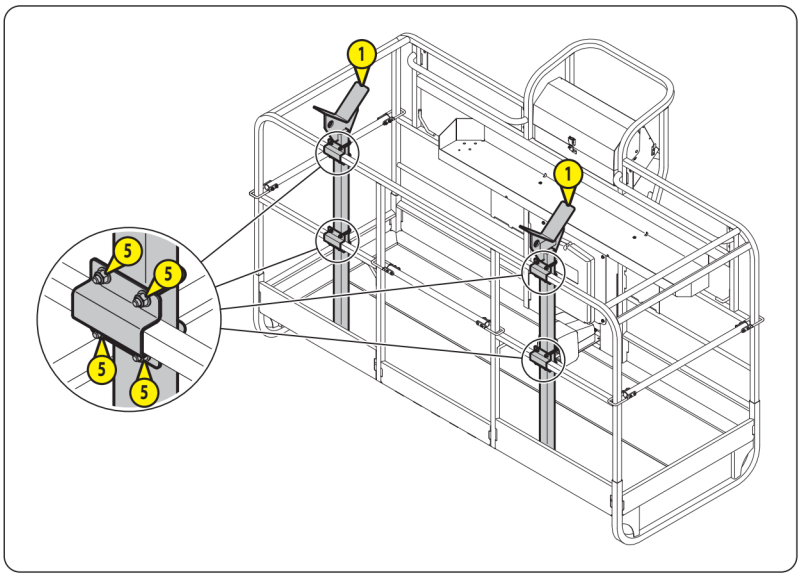



INTRODUCTION

⚠ IMPORTANT ⚠

The PIPE SUPPORT and the PANEL SUPPORT must not be installed at the same time on the same platform:
- Remove the PIPE SUPPORT to install the PANEL SUPPORT.
The PANEL SUPPORT must be installed or removed by qualified maintenance personnel.

STICKERS

⚠ IMPORTANT ⚠

Clean all stickers so that they are legible.
Any stickers which are illegible or damaged must be replaced.
Check that the stickers are present after replacing any spare parts.

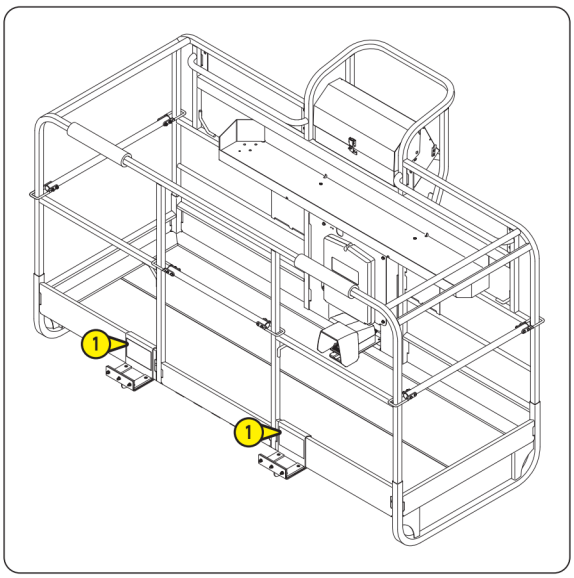

1 - PANEL SUPPORT STICKER Part No. 52557913

Indicates the maximum permissible weight on the PANEL SUPPORT and the maximum permissible dimensions of the panel(s).

NB: 1 sticker on each support, total quantity = 2.

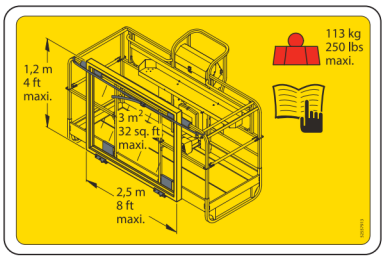

647772 (16/09/2020)
260 TJ-XP ST3A S1 / 280 TJ-X ST3A S1

⚠ IMPORTANT ⚠

The weight of the PANEL SUPPORT reduces the basket's maximum load capacity.

LOAD SPECIFICATIONS		260 TJ-XP ST3A S1			±
Platform					
- Maximum load capacity in the basket: Nobody is in the basket, the PANEL SUPPORT is installed without any load on it	kg (lbs)	390 (860)			-
- Maximum number of people in the basket (indoor use/ outdoor use)		1 / 1	2 / 2	3 / 3	-
- Maximum load capacity of the PANEL SUPPORT.	kg (lbs)	113 (250)	113 (250)	113 (250)	-
- Remaining maximum load capacity of the basket depending on the number of people in the basket: The PANEL SUPPORT is installed with the maximum load on it	kg (lbs)	197 (434)	117 (258)	37 (81)	-

LOAD SPECIFICATIONS		280 TJ-X ST3A S1					±
		ZONE A*			ZONE B*		
Platform							
- Maximum load capacity in the basket: Nobody is in the basket, the PANEL SUPPORT is installed without any load on it	kg (lbs)	340 (749)			230 (507)		-
- Maximum number of people in the basket (indoor use/outdoor use)		1 / 1	2 / 2	3 / 3	1 / 1	2 / 2	-
- Maximum load capacity of the PANEL SUPPORT.	kg (lbs)	113 (250)	113 (250)	100 (220)	113 (250)	70 (154)	-
- Remaining maximum load capacity of the basket depending on the number of people in the basket: The PANEL SUPPORT is installed with the maximum load on it	kg (lbs)	147 (324)	67 (147)	0 (0)	37 (81)	0 (0)	-

*: ◁ 2 - DESCRIPTION: DIMENSIONS AND DIAGRAM 280 TJ-X ST3A S1 for definition of the zones.

⚠ IMPORTANT ⚠

Check the condition of all the components and stickers before any PANEL SUPPORT is installed. Replace them if necessary.
Replace the nuts (6) and (13) each time the PANEL SUPPORT is installed.
The configurations (I) and (II) are the only ones authorised.
Always use the original strap supplied with the PANEL SUPPORT.

- Switch on the engine.
- Move the platform to a level surface.
- Put the platform in transport position. Put the turntable and basket in neutral position, ◁ 2 - DESCRIPTION: PLATFORM OPERATION: TRANSPORT/WORKING POSITION.
- Raise the jib until the basket floor is about 1.2 m (4 ft) from the ground.
- Stop the engine. Switch off the power to the platform.
- Position the 2 supports (1) on the base boards on either side of the basket.

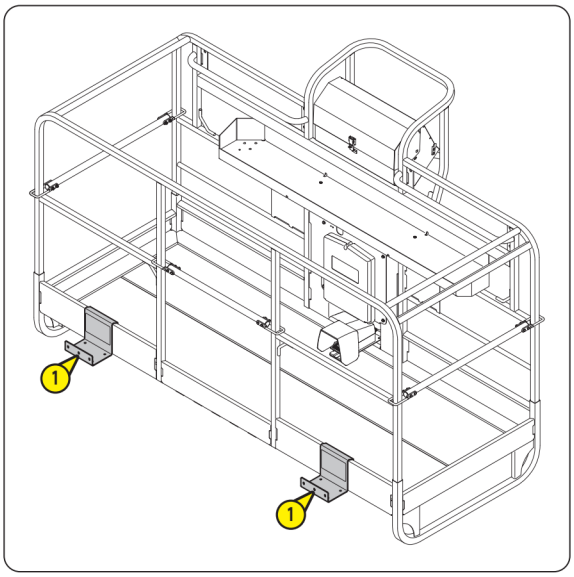

- Screw the 2 supports (1) to the basket using the flanges (2), the pads (3) and the fixing elements (4), (5) and (6):
  - The nuts are correctly tightened when the screw heads (4) are recessed into the pads by approximately 2.5 mm (2 screw threads (4) must be visible).

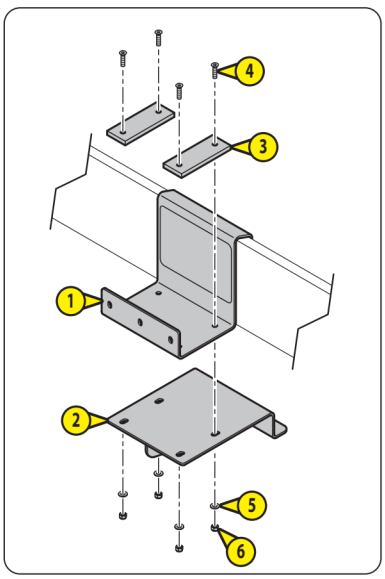

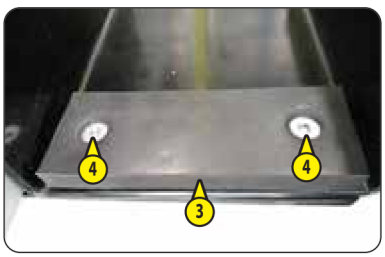

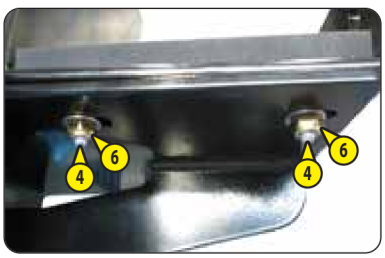

- If the pads (7) are not in place, screw them using the fixing elements (8), (9) and (10):
  - Tightening torque = 8.2 N.m ± 1.6 N.m

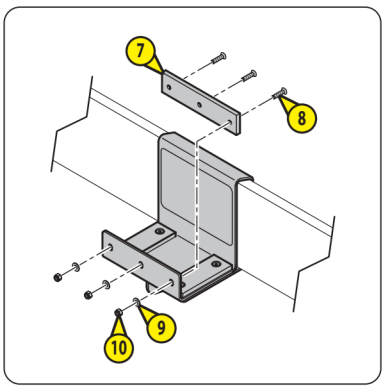

647772 (16/09/2020)
260 TJ-XP ST3A S1 / 280 TJ-X ST3A S1

- Choose one of the 2 configurations:

CONFIGURATION		I	II
Minimum panel width	m (ft)	1.2 (4)	2.2 (6.5)
Maximum panel width	m (ft)	2.5 (8)	
Maximum panel height	m (ft)	1.2 (4)	

- Unscrew the fixing elements A or B (screws 11, washers 12 and nuts 13) depending on the configuration chosen.
- Discard the nuts 13.
- Move and screw the 2 supports using the fixing elements A or B, replace the nuts 13 with new ones:
  - Tightening torque = 20 N.m ± 4 N.m

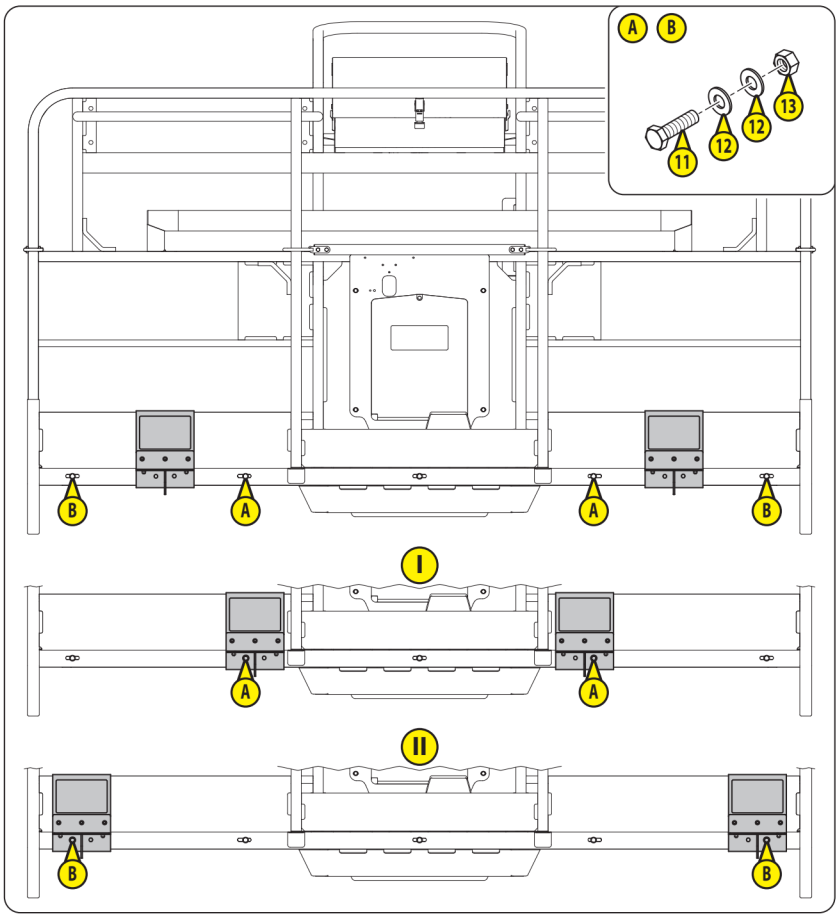

- Switch on the engine.
- Fully lower the jib.
- Stop the engine. Switch off the power to the platform.
- Install the foam profiles 14 and the sleeves 15 .
- Attach the strap 16 provided between the 2 guardrails C and D and between the 2 guardrails E and F.

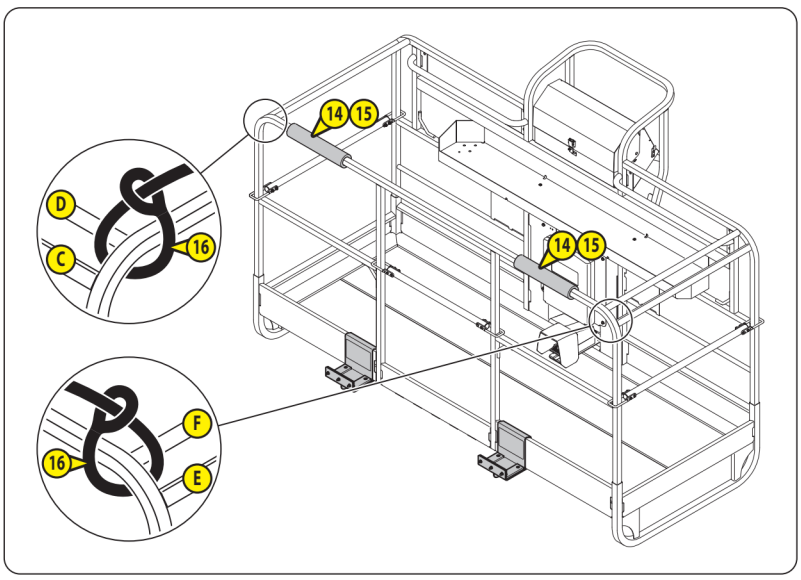

⚠ IMPORTANT ⚠

Replace the nuts (13) each time the PANEL SUPPORT is dismantled.
After each time the PANEL SUPPORT is dismantled:
- The nuts (6) and (13) must be replaced whenever the PANEL SUPPORT is installed, it is recommended to replace them with new ones for the next installation.
- Check the condition of all the other components and stickers. Replace them if necessary.
- Store the PANEL SUPPORT in a clean, dry place.

- Switch on the engine.
- Move the platform to a level surface.
- Put the platform in transport position. Put the turntable and basket in neutral position, ◁ 2 - DESCRIPTION: PLATFORM OPERATION: TRANSPORT/WORKING POSITION.
- Raise the jib until the basket floor is about 1.2 m (4 ft) from the ground.
- Stop the engine. Switch off the power to the platform.
- Unscrew the fixing elements (A) or (B) (screws (11), washers (12) and nuts (13)) depending on the configuration (I) or (II).
- Unscrew the fixing elements (4), (5) and (6), ◁ INSTALLATION.
- Remove the 2 supports (1), the 2 flanges (2) and the 4 pads (3), ◁ INSTALLATION.
- Discard the nuts (6) and (13).

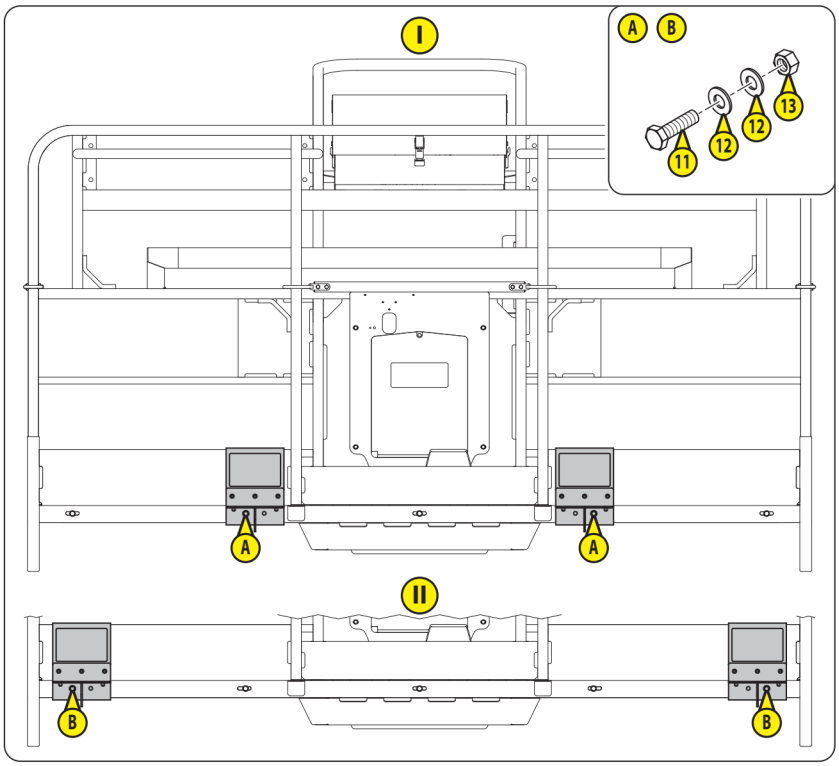

- Refit the fixing elements (A) or (B) (screws (11), washers (12) and nuts (13)), replace the nuts (13) with new ones:
  - Tightening torque = 20 N.m ± 4 N.m
- Store the PANEL SUPPORT with new nuts (6) and (13).

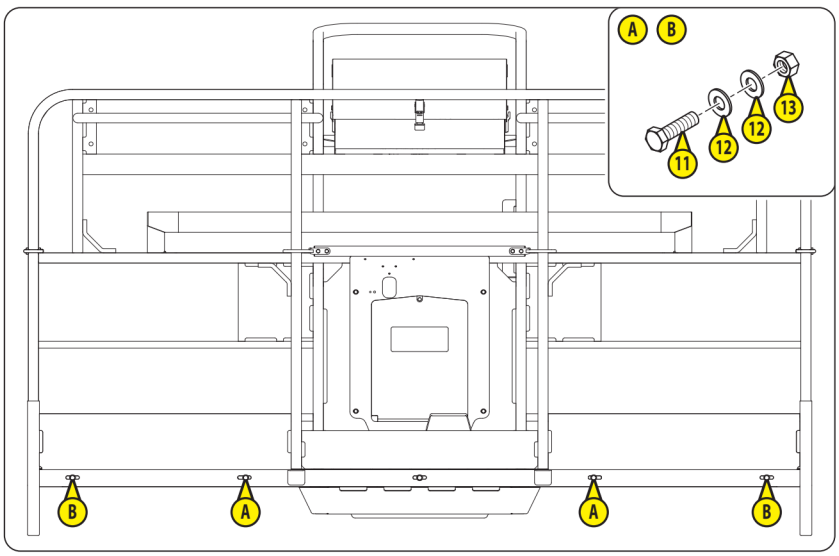

647772 (16/09/2020)
260 TJ-XP ST3A S1 / 280 TJ-X ST3A S1

⚠ IMPORTANT ⚠

The weight of the PANEL SUPPORT reduces the basket's maximum load capacity, ◁ SPECIFICATIONS.

The configurations Ⓘ and Ⓘⓘ are the only ones authorised, ◁ INSTALLATION to change the configuration.

The platform must be on a level surface and the basket must be level before panels can be placed on the PANEL SUPPORT.

The panels must be centred with the basket.

Make sure that the panels are correctly attached with the strap before the basket is lifted.

CONFIGURATION		Ⓘ	Ⓘⓘ
Minimum panel width	m (ft)	1.2 (4)	2.2 (6.5)
Maximum panel width	m (ft)	2.5 (8)	
Maximum panel height	m (ft)	1.2 (4)	

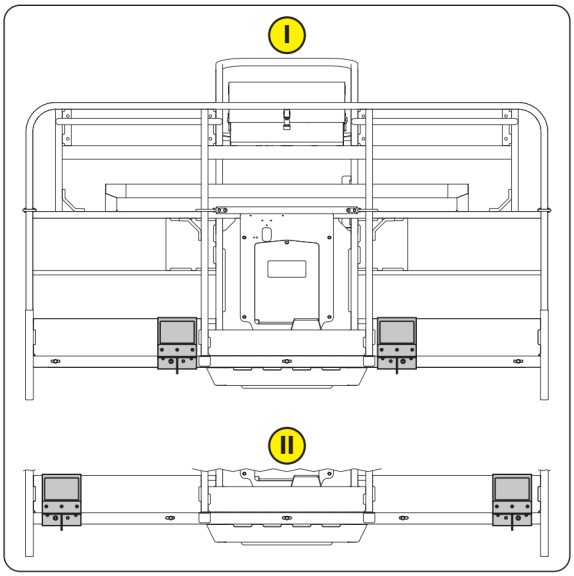

- Move the platform to a level surface.
- Put the platform in transport position. Put the turntable and basket in neutral position, ◁ 2 - DESCRIPTION: PLATFORM OPERATION: TRANSPORT/WORKING POSITION.
- Lift or lower the jib to put the PANEL SUPPORT at a comfortable height.
- Make sure that the basket is level. If necessary, tilt the basket/jib upwards or downwards.
- Place one or more panels on the PANEL SUPPORT.
- Attach the panels to the basket using the strap.

NB: The strap is supplied with the PANEL SUPPORT.

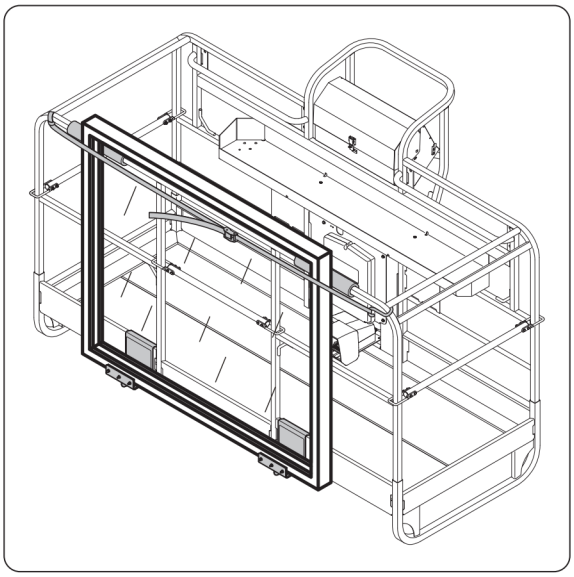

647772 (16/09/2020)
260 TJ-XP ST3A S1 / 280 TJ-X ST3A S1